GENERAL LAYOUT OF ECUS

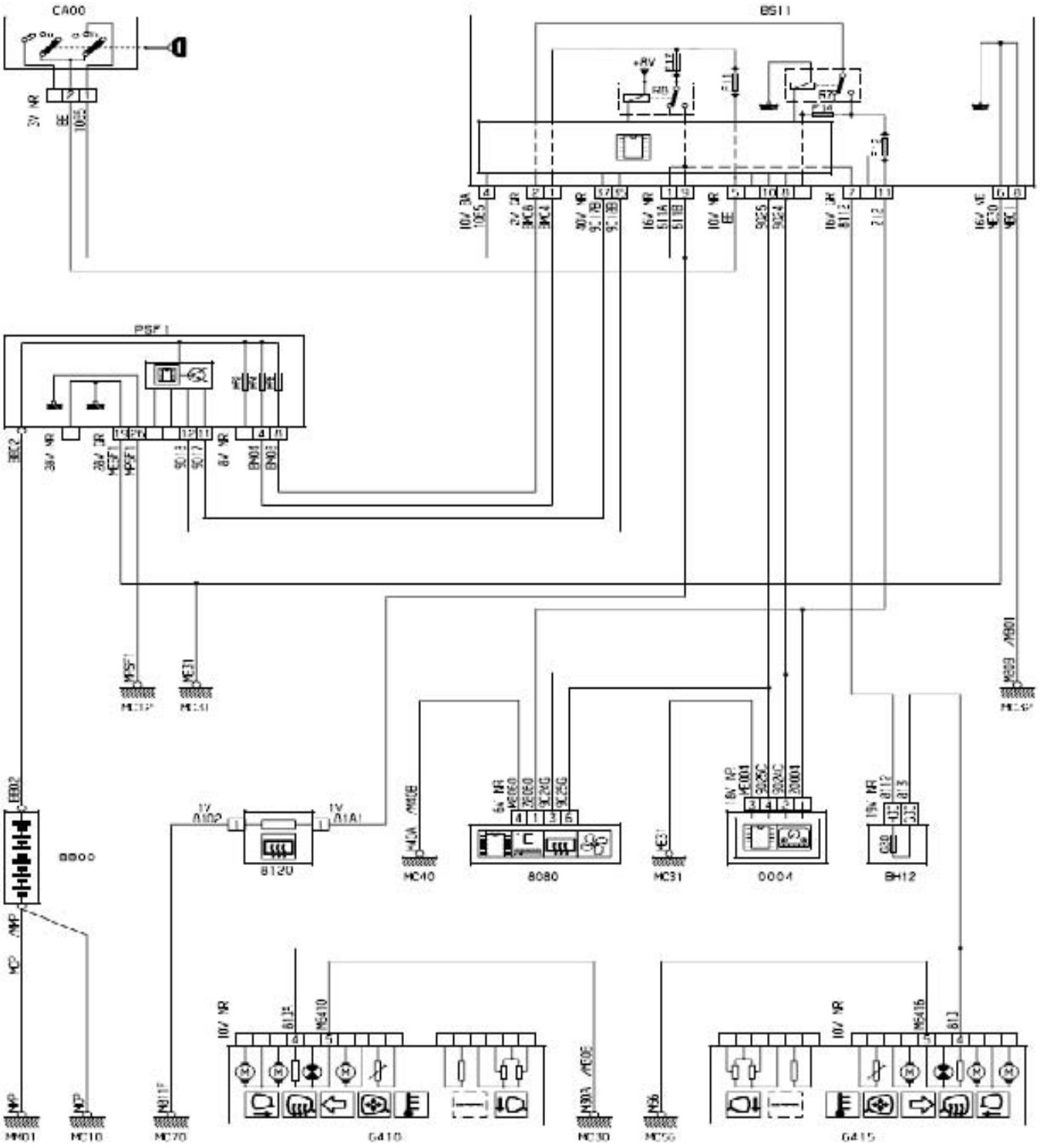

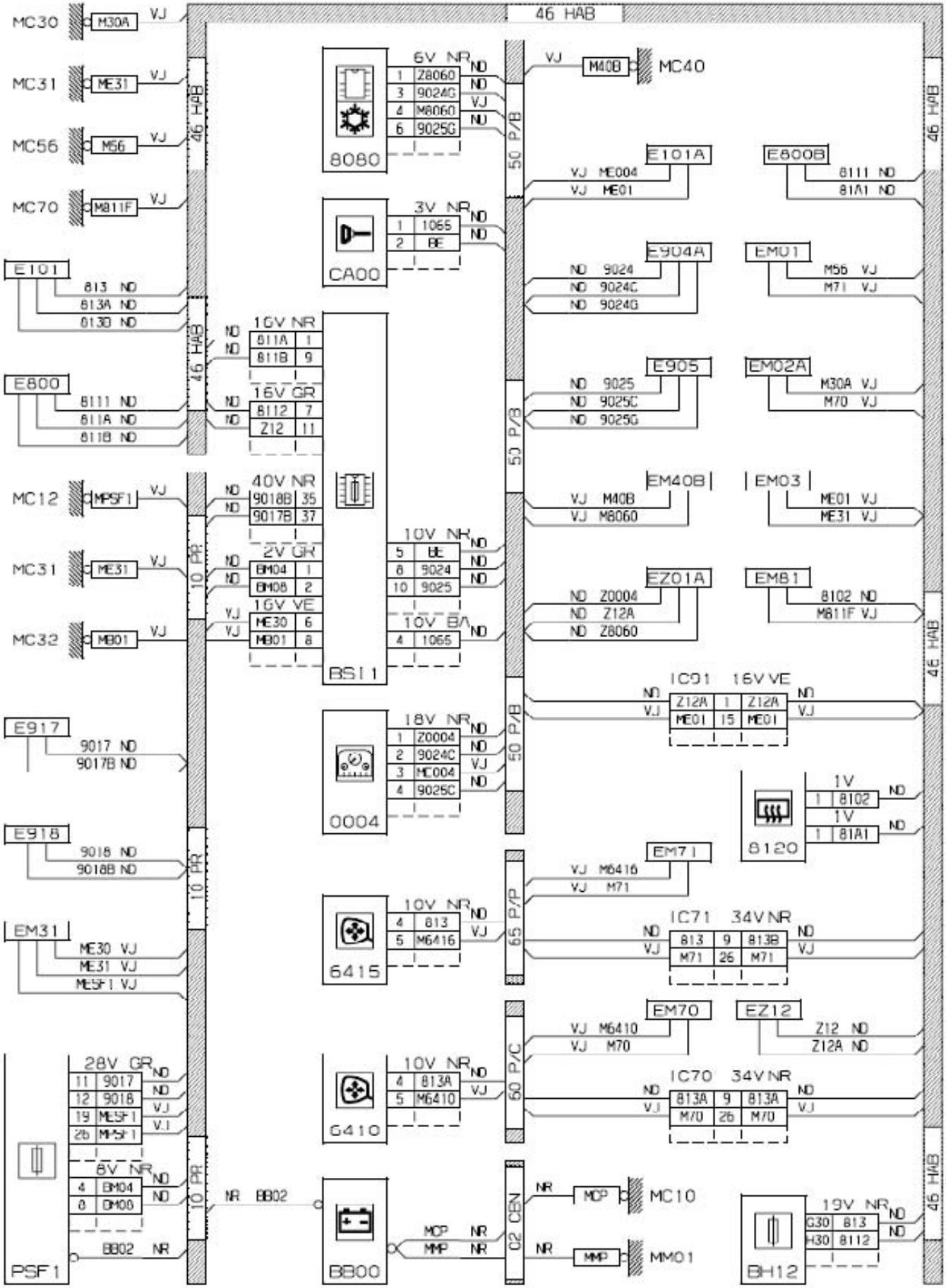
46 HAB
MC30
M30A
MC31
ME31
MC56
M56
MC70
M811F
E101
E800
MC12
MPSF1
MC32
M801
E917
E918
EM31
PSF1
8080
CA00
BS11
0004
6415
6410
BB00
50 P/B
65 P/P
60 P/C
02 CBN
10 PR
M40B
MC40
E101A
E800B
E904A
EM01
E905
EM02A
EM40B
EM03
EZ01A
EM81
IC91
IC71
EM71
EM70
EZ12
IC70
8120
MC10
MM01
BH12

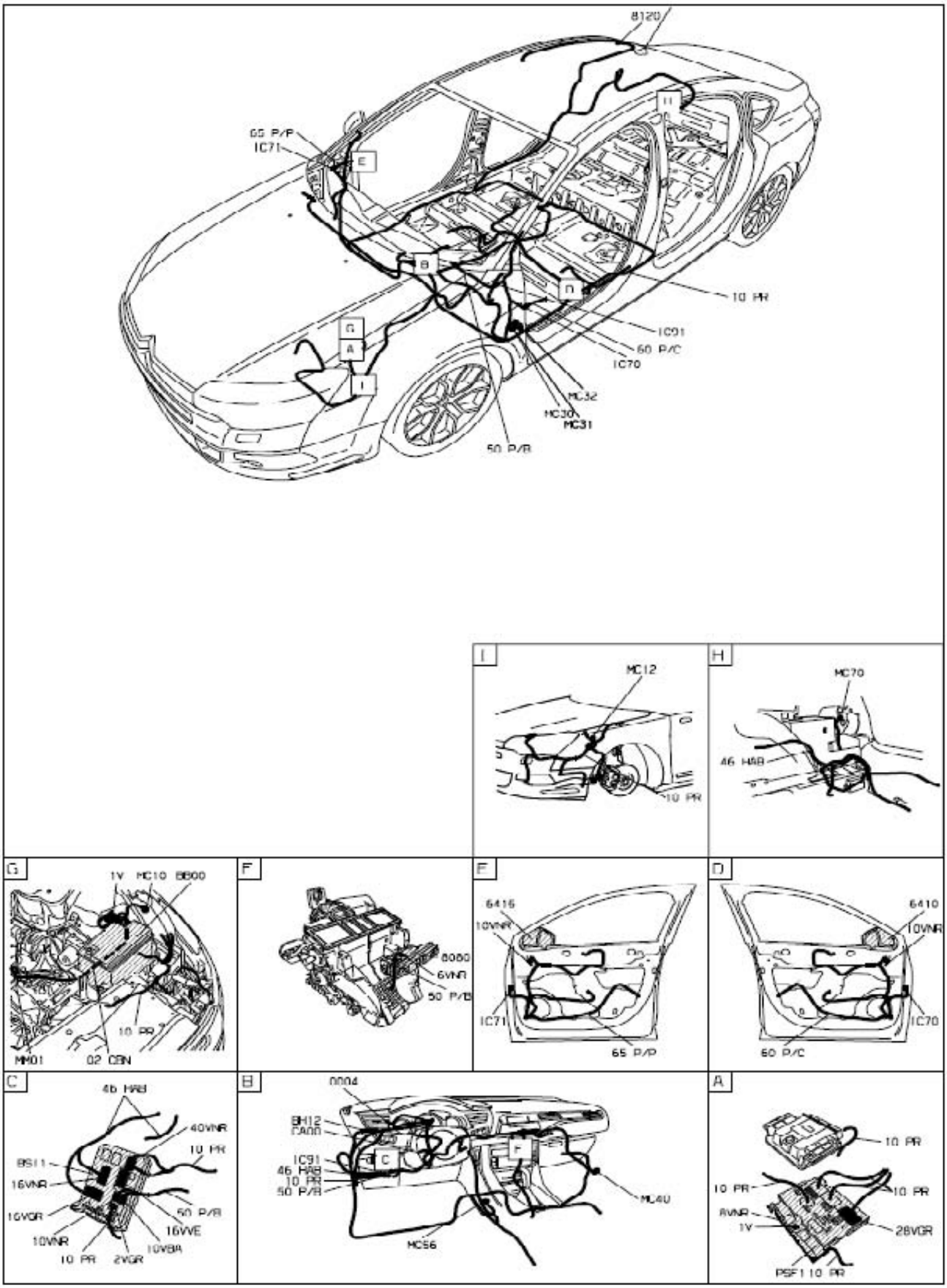
8120
65 P/P
IC71
E
B
D
10 PR
IC91
60 P/C
IC70
MC32
MC30
MC31
50 P/B
G
A
I
MC12
10 PR
H
MC70
46 HAB
G
1V MC10 8800
10 PR
MM01
02 CBN
F
8000
6VNR
50 P/B
F
6415
10VNR
IC71
65 P/P
D
6410
10VNR
IC70
60 P/C
C
46 HAB
40VNR
10 PR
BS11
16VNR
16VGR
50 P/B
16VVE
10VNR
10VBA
10 PR
2VGR
B
0004
BH12
CA00
IC91
46 HAB
10 PR
50 P/B
ML40
MC56
A
10 PR
10 PR
10 PR
RVNR
1V
28VGR
PSF1 10 PR

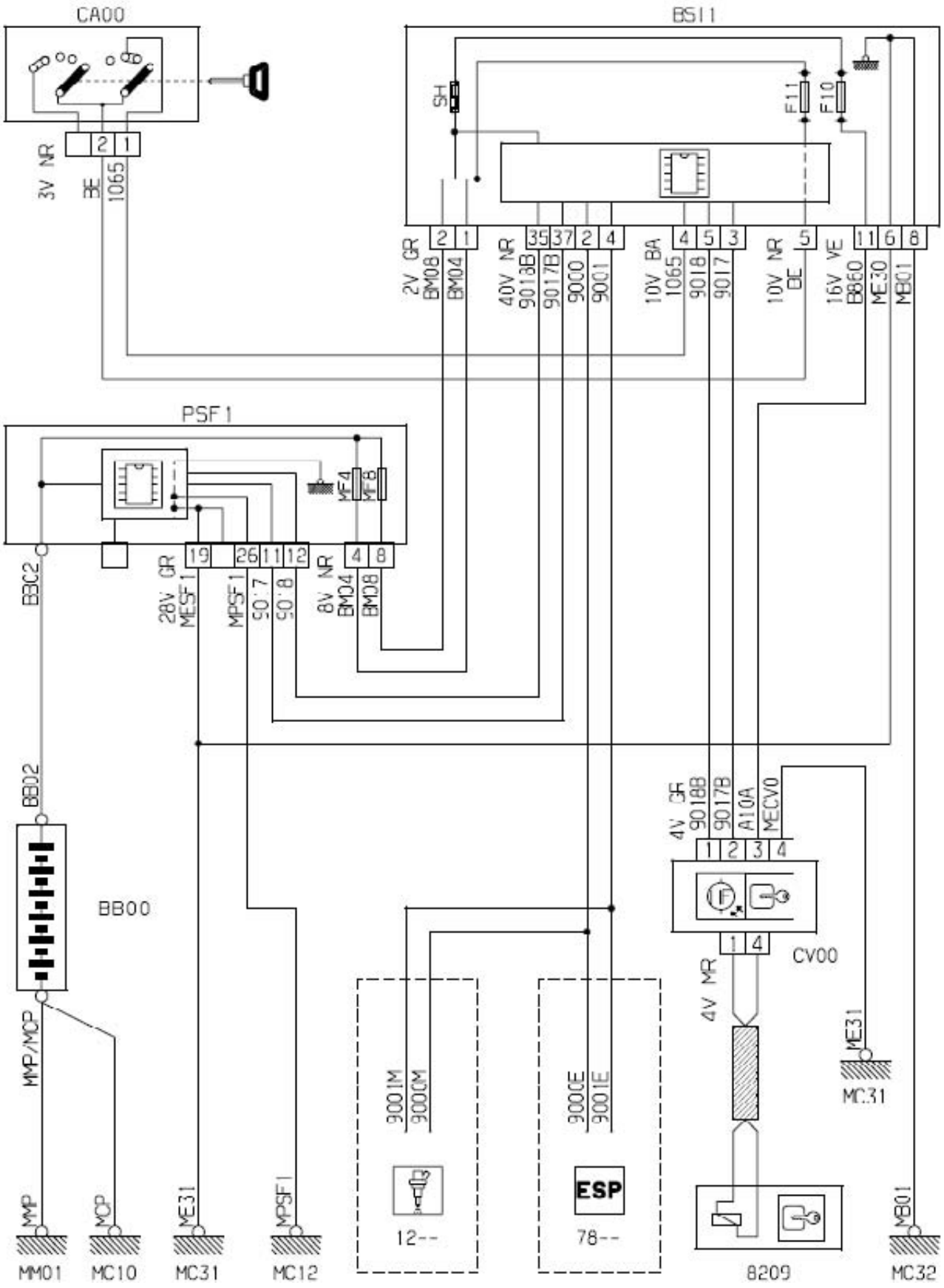
CA00
BS11
SH
F11
F10
3V NR
BE
1065
2V GR
BM08
BM04
40V NR
9013B
9017B
9000
9001
10V BA
1065
9018
9017
10V NR
BE
16V VE
B860
ME30
MB01
PSF1
MF4
MF8
BBC2
28V GR
MESF1
MPSF1
50'7
50'8
8V NR
BM04
BM08
BB02
BB00
MMP/MCP
4V GR
9018B
9017B
A10A
MECV0
CV00
4V MR
ME31
MC31
9001M
9000M
9000E
9001E
ESP
12--
78--
MMP
MCP
ME31
MPSF1
MM01
MC10
MC31
MC12
8209
MB01
MC32

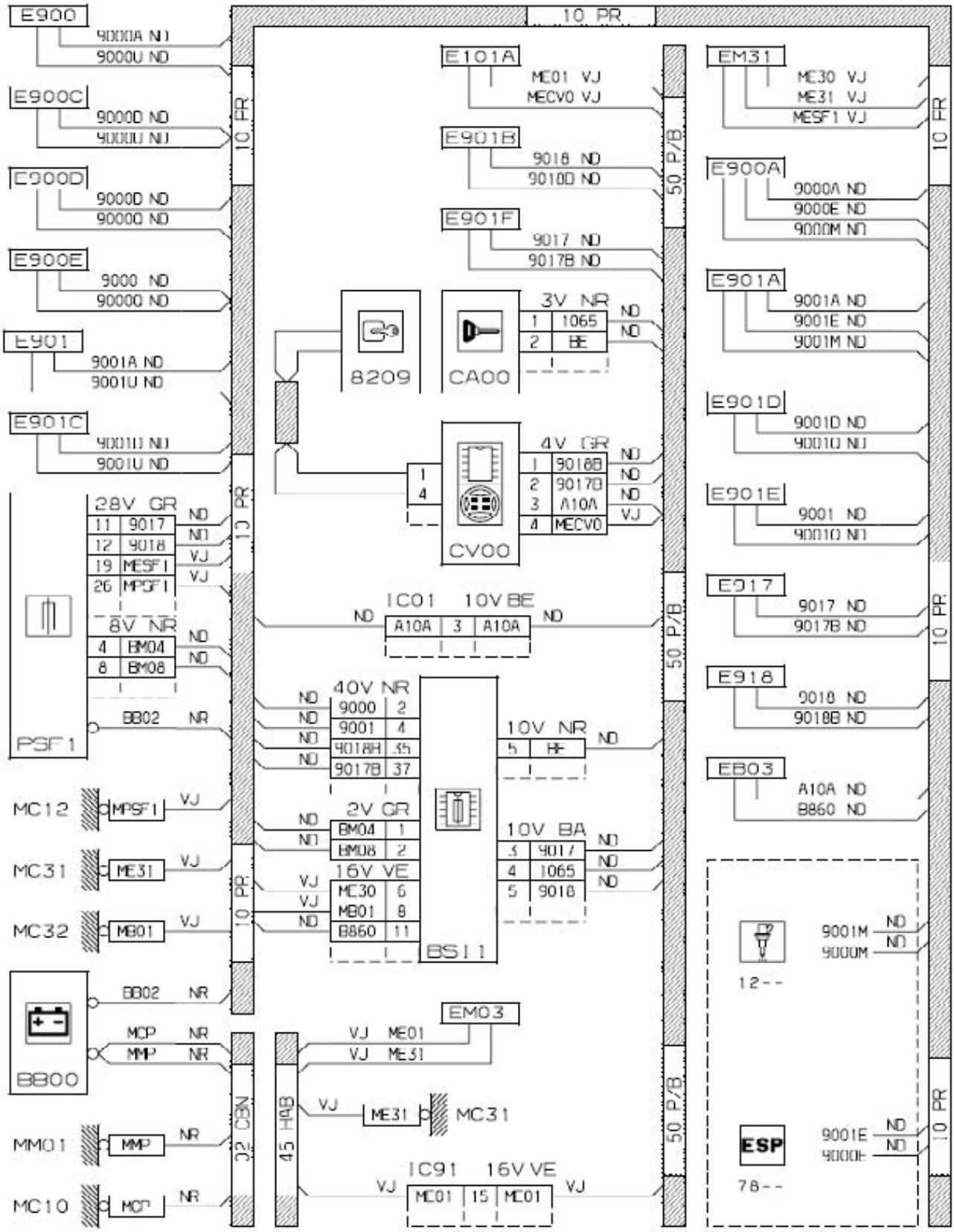
E900
9000A ND
9000U ND
E900C
9000D ND
9000U ND
E900D
9000D ND
9000Q ND
E900E
9000 ND
9000Q ND
E901
9001A ND
9001U ND
E901C
9001D ND
9001U ND
10 PR
E101A
ME01 VJ
MECV0 VJ
E901B
9018 ND
9018D ND
E901F
9017 ND
9017B ND
50 P/B
EM31
ME30 VJ
ME31 VJ
MESF1 VJ
E900A
9000A ND
9000E ND
9000M ND
E901A
9001A ND
9001E ND
9001M ND
E901D
9001D ND
9001Q ND
E901E
9001 ND
9001Q ND
E917
9017 ND
9017B ND
E918
9018 ND
9018B ND
EB03
A10A ND
B860 ND
8209
CA00
3V NR
1 1065 ND
2 BE ND
CV00
4V GR
1 9018B ND
2 9017B ND
3 A10A ND
4 MECV0 VJ
PSF1
28V GR
11 9017 ND
12 9018 ND
19 MESF1 VJ
26 MPSF1 VJ
8V NR
4 BM04 ND
8 BM08 ND
BB02 NR
IC01 10V BE
ND A10A 3 A10A ND
40V NR
ND 9000 2
ND 9001 4
ND 9018H 35
ND 9017B 37
BS11
10V NR
5 BE ND
2V GR
ND BM04 1
ND BM08 2
16V VE
VJ ME30 6
VJ MB01 8
ND B860 11
10V BA
3 9017 ND
4 1065 ND
5 9018 ND
MC12 MPSF1 VJ
MC31 ME31 VJ
MC32 MB01 VJ
12--
9001M ND
9000M ND
BB00
BB02 NR
MCP NR
MMP NR
EM03
VJ ME01
VJ ME31
32 CBN
45 HAB
VJ ME31 MC31
MM01 MMP NR
MC10 MCP NR
IC91 16V VE
VJ MC01 15 MC01 VJ
ESP
78--
9001E ND
9000E ND

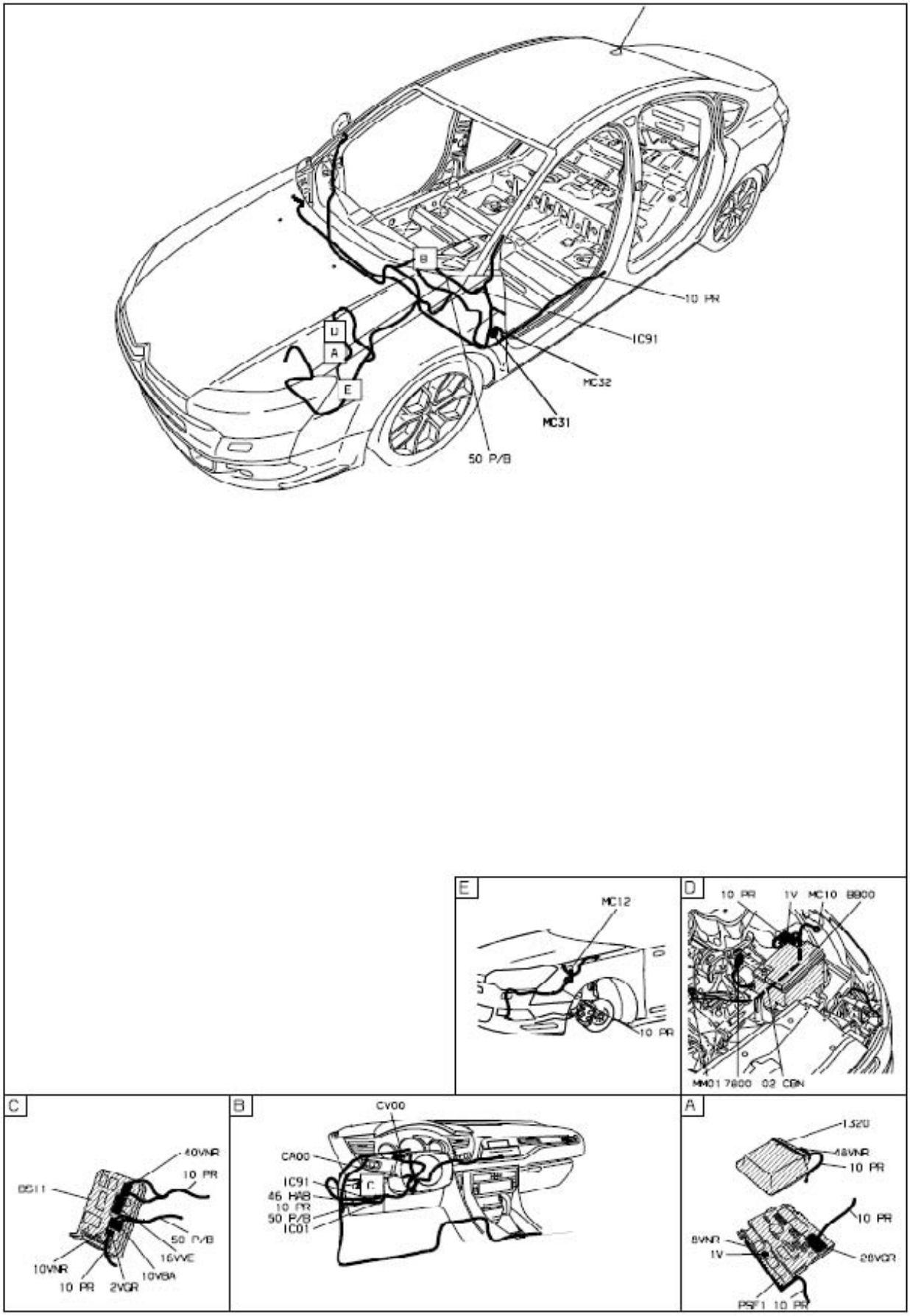
B
D
A
E
10 PR
IC91
MC32
MC31
50 P/B
E
MC12
10 PR
D
10 PR
1V
MC10
BB00
MM01 7800 02 CBN
C
40VNR
10 PR
BS11
50 P/B
16VVE
10VNR
10VBA
10 PR
2VGR
B
CV00
CA00
IC91
46 RAB
10 PR
50 P/B
IC01
A
1520
48VNR
10 PR
10 PR
8VNR
1V
28VGR
PSF1 10 PR

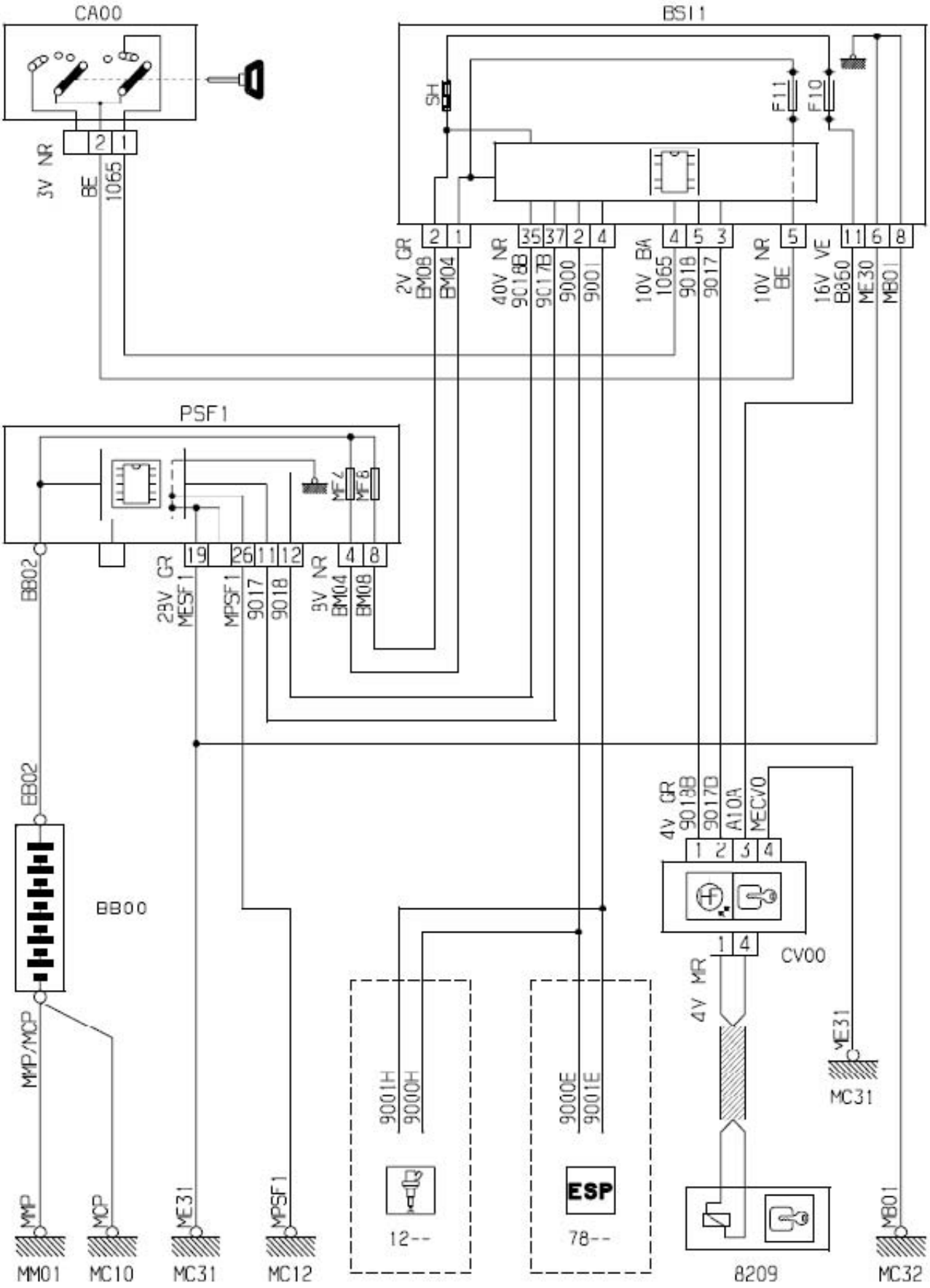
CA00
BS11
SH
F11
F10
3V NR
BE
1065
2V GR
BM08
BM04
40V NR
9018B
9017B
9000
9001
10V BA
1065
9018
9017
10V NR
BE
16V VE
B860
ME30
MB01
PSF1
MF7
MF6
BB02
29V GR
MESF1
MPSF1
9017
9018
3V NR
BM04
BM08
EB02
BB00
MMP/MCP
MMP
MCP
ME31
MPSF1
MM01
MC10
MC31
MC12
4V GR
9018B
9017D
A10A
MECV0
CV00
4V MR
ME31
MC31
9001H
9000H
12--
9000E
9001E
ESP
78--
8209
MB01
MC32

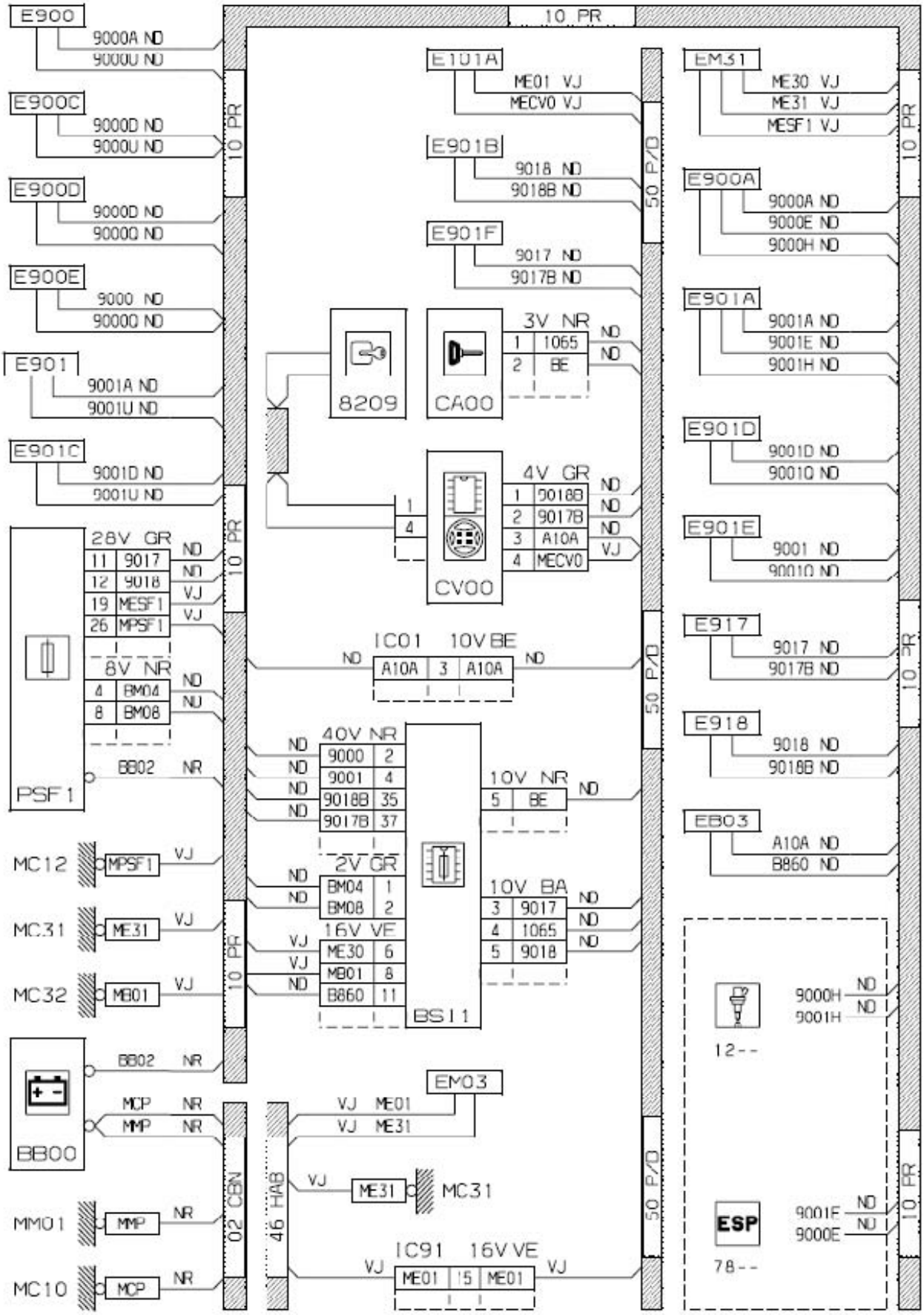
E900
9000A ND
9000U ND
E900C
9000D ND
9000U ND
E900D
9000D ND
9000Q ND
E900E
9000 ND
9000Q ND
E901
9001A ND
9001U ND
E901C
9001D ND
9001U ND
10 PR
E101A
ME01 VJ
MECV0 VJ
E901B
9018 ND
9018B ND
E901F
9017 ND
9017B ND
50 P/D
EM31
ME30 VJ
ME31 VJ
MESF1 VJ
E900A
9000A ND
9000E ND
9000H ND
E901A
9001A ND
9001E ND
9001H ND
E901D
9001D ND
9001Q ND
E901E
9001 ND
9001Q ND
E917
9017 ND
9017B ND
E918
9018 ND
9018B ND
EB03
A10A ND
B860 ND
8209
CA00
3V NR
1 1065 ND
2 BE ND
CV00
4V GR
1 9018B ND
2 9017B ND
3 A10A ND
4 MECV0 VJ
28V GR
11 9017 ND
12 9018 ND
19 MESF1 VJ
26 MPSF1 VJ
8V NR
4 BM04 ND
8 BM08 ND
PSF1
BB02 NR
IC01 10V BE
ND A10A 3 A10A ND
40V NR
9000 2
9001 4
9018B 35
9017B 37
2V GR
BM04 1
BM08 2
16V VE
ME30 6
MB01 8
B860 11
BS11
10V NR
5 BE ND
10V BA
3 9017 ND
4 1065 ND
5 9018 ND
MC12 MPSF1 VJ
MC31 ME31 VJ
MC32 MB01 VJ
BB00
BB02 NR
MCP NR
MMP NR
EM03
VJ ME01
VJ ME31
ME31 MC31
MM01 MMP NR
MC10 MCP NR
02 CBN
46 HAB
IC91 16V VE
VJ ME01 5 ME01 VJ
12--
9000H ND
9001H ND
ESP
78--
9001F ND
9000E ND

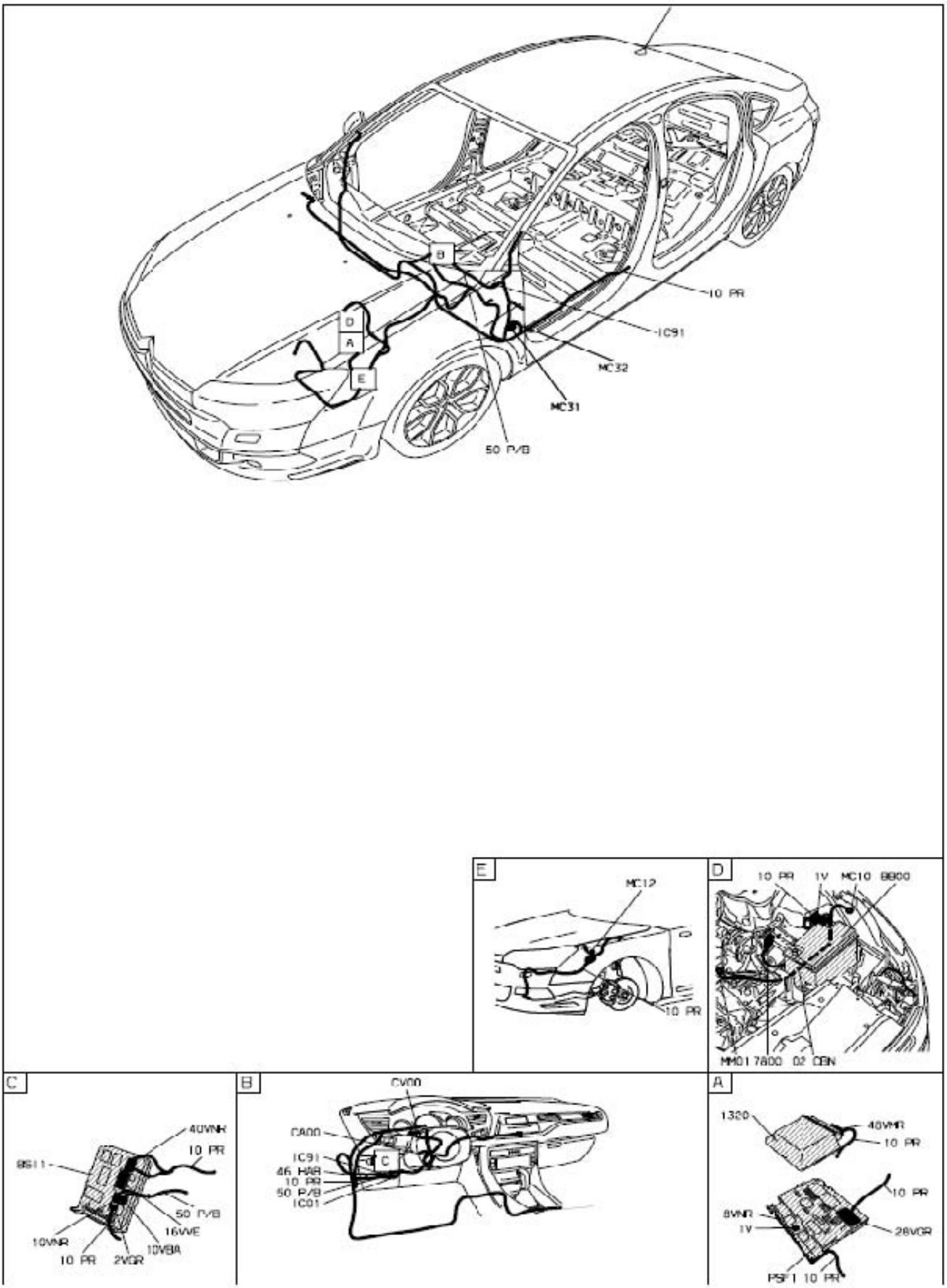
B
D
A
E
10 PR
IC91
MC32
MC31
50 P/B
E
MC12
10 PR
D
10 PR
1V
MC10
8800
MM01 7800
02 CBN
C
40VNR
10 PR
8S11
50 P/B
16VVE
10VNR
10 PR
2VGR
10VBA
B
CV00
CA00
IC91
46 HAR
10 PR
50 P/B
IC01
C
A
1320
40VNR
10 PR
10 PR
8VNR
1V
28VGR
PSF1
10 PR

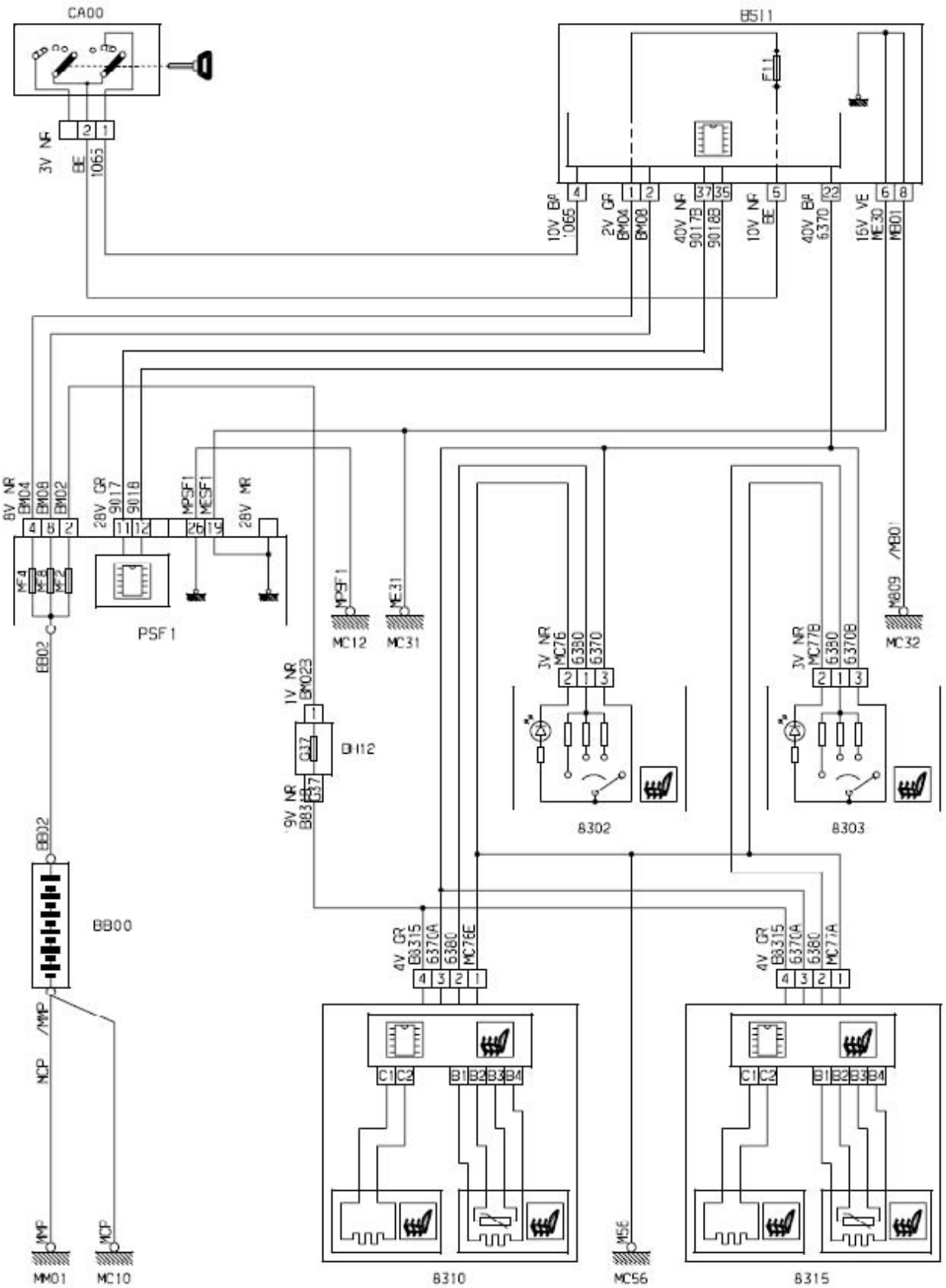
CA00
B511
F11
3V NR
BE
1065
10V BR
1065
2V GR
BM04
BM08
40V NR
9017B
9018B
10V NR
BE
40V BR
6370
15V VE
ME30
MB01
8V NR
BM04
BM08
BM02
28V GR
9017
9018
MPSF1
MESF1
28V MR
PSF1
MPSF1
MC12
ME31
MC31
MB09
/MB01
MC32
3V NR
MC76
6380
6370
3V NR
MC77B
6380
6370B
B302
B303
BB02
1V NR
BM023
BH12
9V NR
BB32
BB12
BB00
4V GR
B8315
6370A
6380
MC76E
4V GR
B8315
6370A
6380
MC77A
C1 C2
B1 B2 B3 B4
/MMP
MCP
MMP
MCP
MM01
MC10
B310
MC56
B315

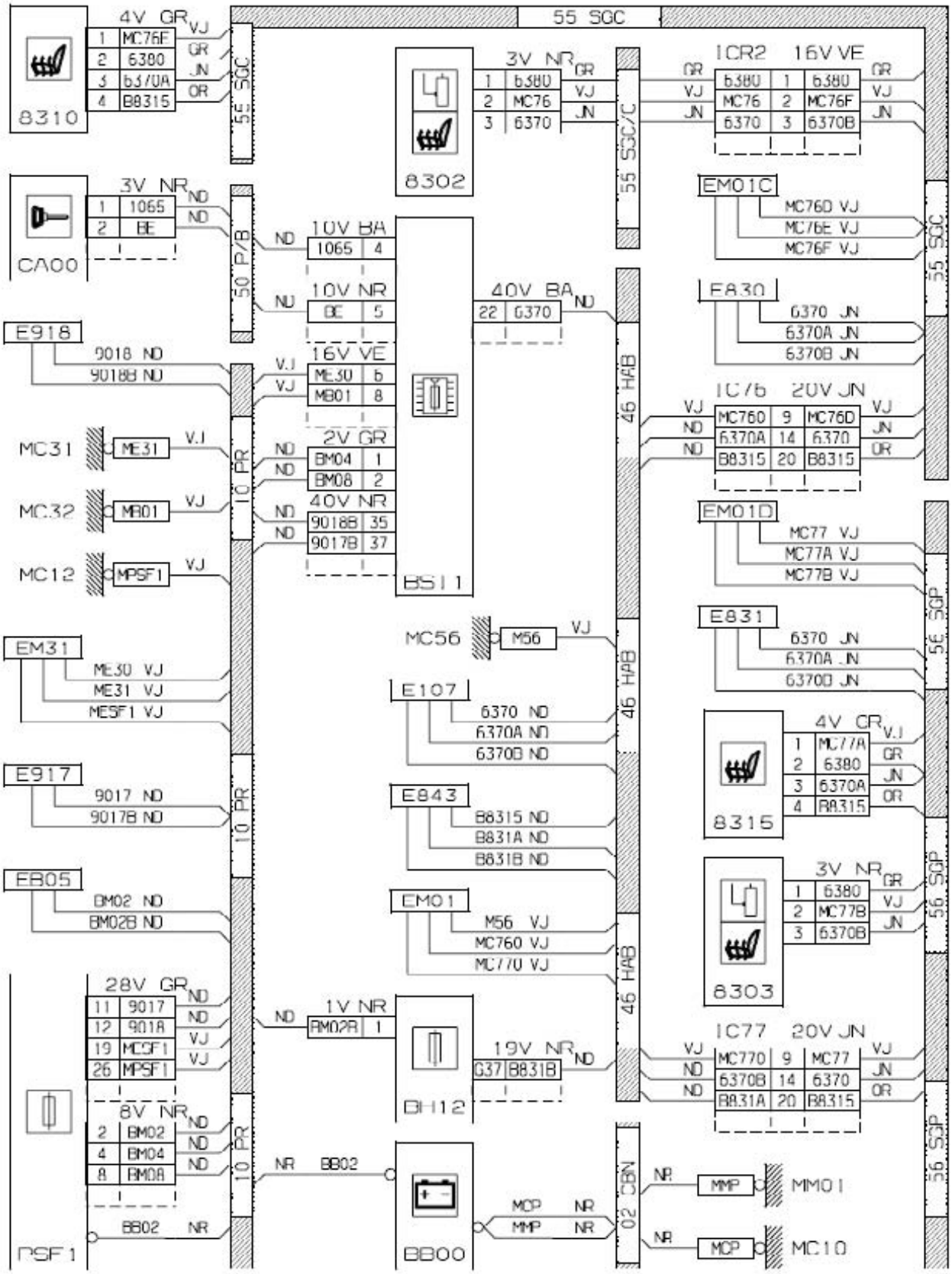
55 SGC
8310
4V GR
MC76F
6380
6370A
B8315
8302
3V NR
6380
MC76
6370
ICR2 16V VE
6380
MC76
6370
6380
MC76F
6370B
CA00
3V NR
1065
BE
10V BA
1065
10V NR
BE
40V BA
6370
EM01C
MC76D VJ
MC76E VJ
MC76F VJ
E830
6370 JN
6370A JN
6370B JN
E918
9018 ND
9018B ND
16V VE
ME30
MB01
IC76 20V JN
MC76D
6370A
B8315
MC31
ME31
2V GR
BM04
BM08
MC32
MB01
40V NR
9018B
9017B
MC12
MPSF1
BS11
EM01D
MC77 VJ
MC77A VJ
MC77B VJ
E831
6370 JN
6370A JN
6370B JN
MC56
M56
EM31
ME30 VJ
ME31 VJ
MESF1 VJ
E107
6370 ND
6370A ND
6370B ND
4V GR
MC77A
6380
6370A
B8315
8315
E917
9017 ND
9017B ND
E843
B8315 ND
B831A ND
B831B ND
EB05
BM02 ND
BM02B ND
EM01
M56 VJ
MC76D VJ
MC77D VJ
3V NR
6380
MC77B
6370B
8303
28V GR
9017
9018
MCSF1
MPSF1
1V NR
BM02B
19V NR
6370
B831B
IC77 20V JN
MC77D
6370B
B831A
B8315
8V NR
BM02
BM04
BM08
BH12
BB02
BB00
MCP
MMP
MMO1
MC10
PSF1

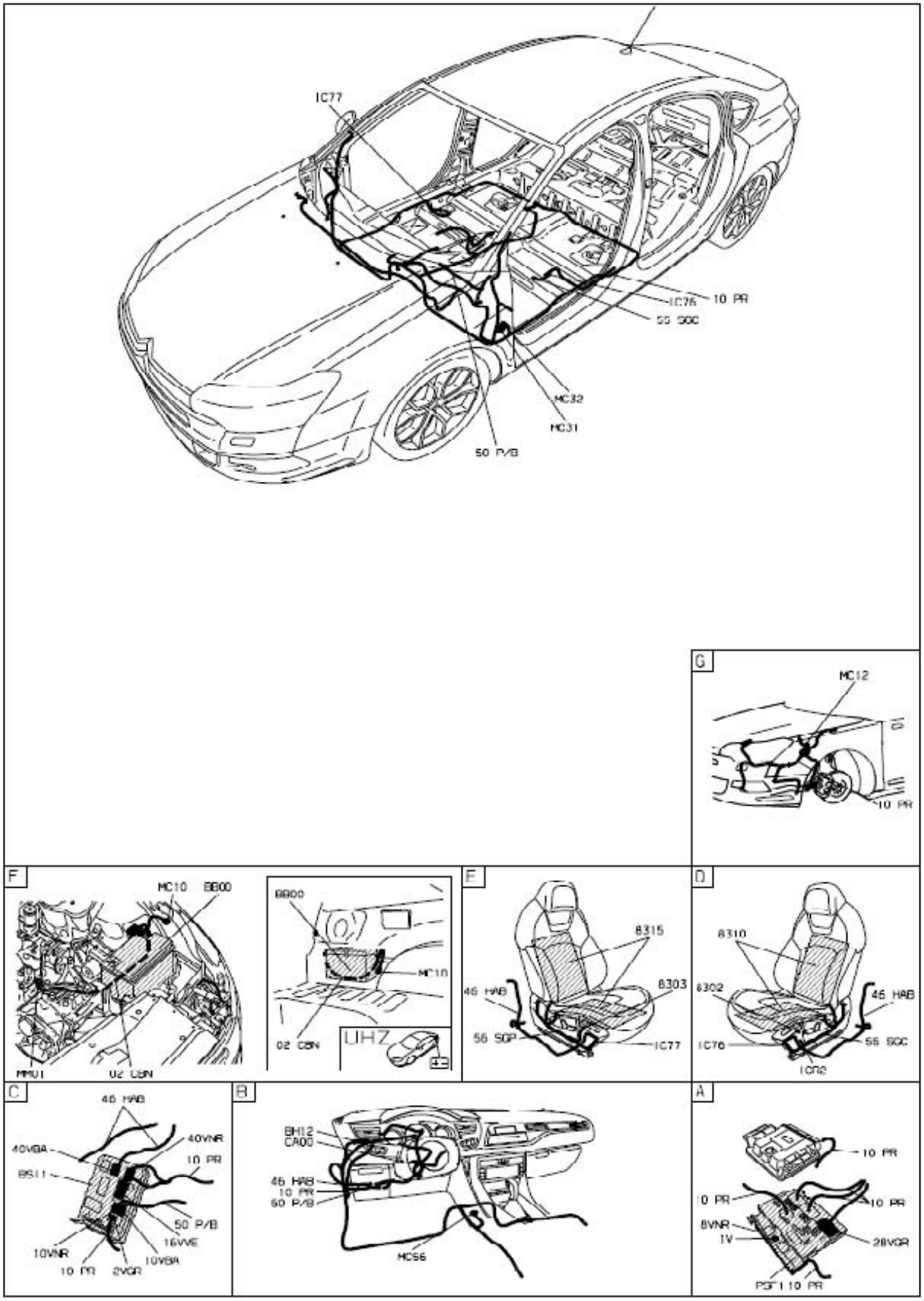
IC77
IC76
10 PR
55 SGC
MC32
MC31
50 P/B
G
MC12
10 PR
F
MC10
BB00
MMU1
U2 CBN
BB00
MC10
02 CBN
UHZ
E
8315
8303
46 HAB
56 SGP
IC77
D
8310
8302
46 HAB
IC76
55 SGC
IC02
C
46 HAB
40VGA
40VNR
10 PR
BS11
50 P/B
16VVE
10VNR
10 PR
2VGR
10VBA
B
BH12
CA00
46 HAB
10 PR
60 P/B
MC56
A
10 PR
10 PR
10 PR
8VNR
1V
28VGR
PSF 1 10 PR

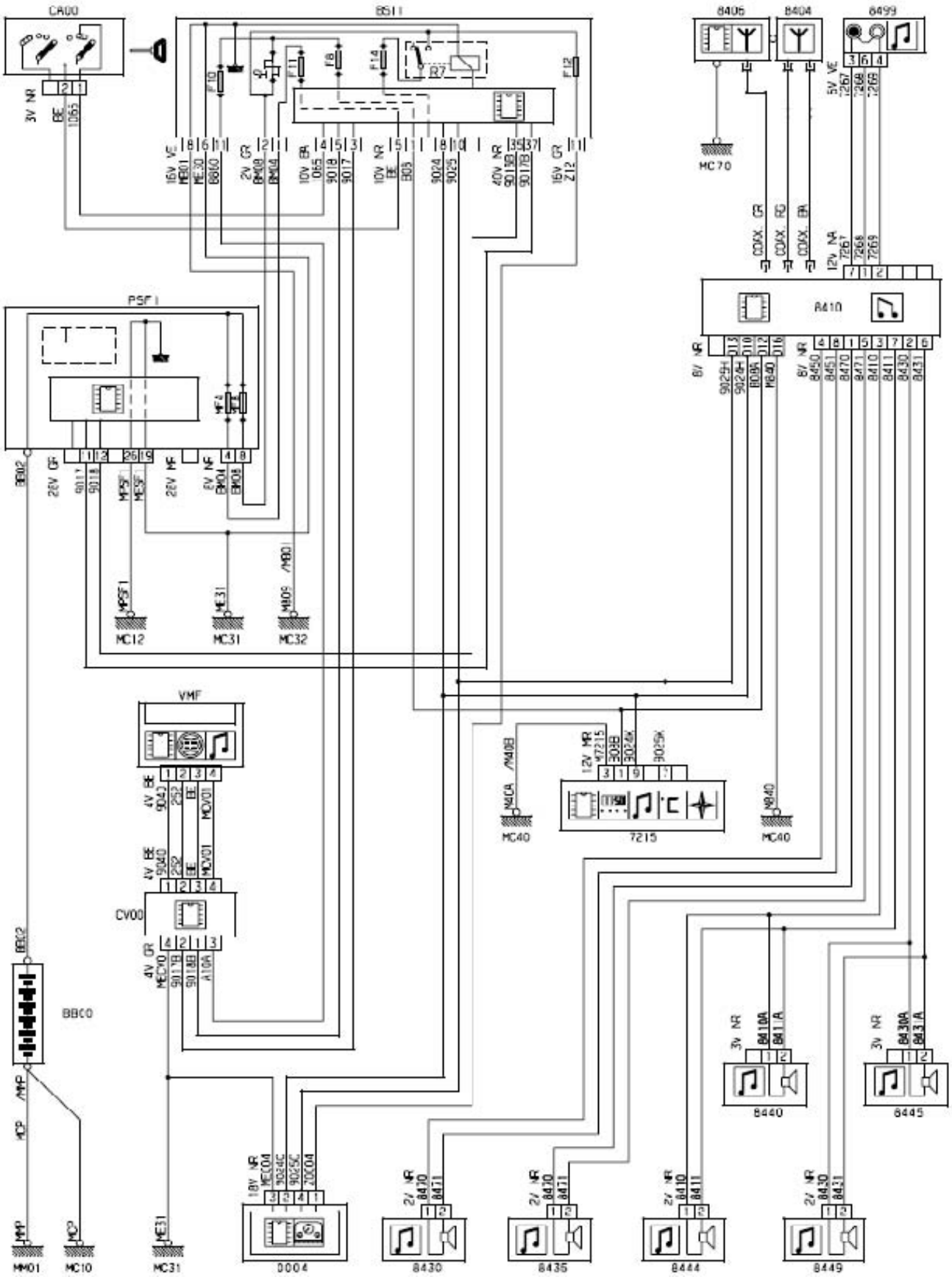
CA00
BS11
8406
8404
8499
MC70
PSF1
A410
MC12
MC31
MC32
VMF
CV00
BB00
7215
MC40
8440
8445
0004
8430
8435
8444
8449
MM01
MC10

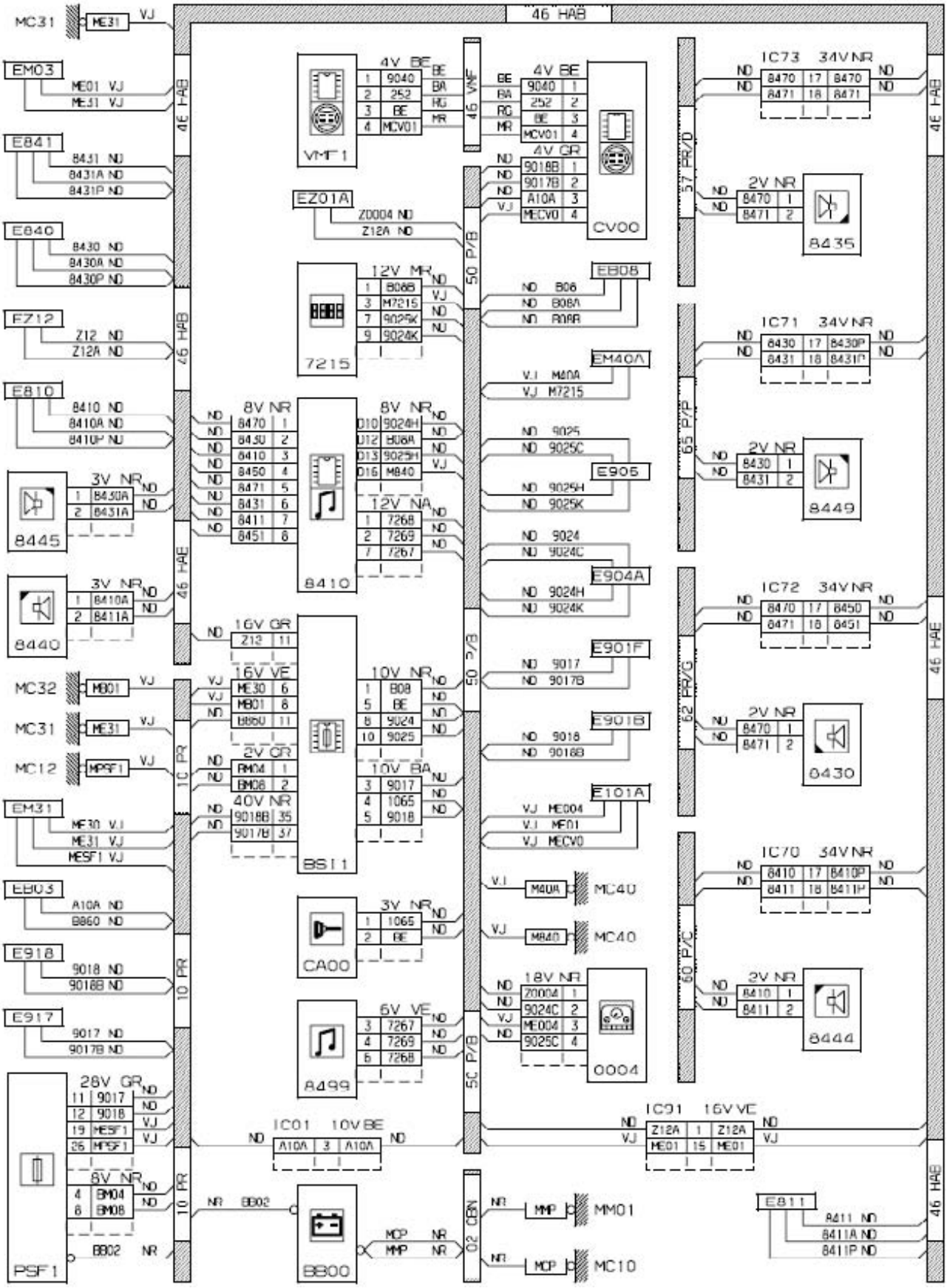
46 HAB
MC31
ME31
VJ
EM03
ME01 VJ
ME31 VJ
E841
8431 ND
8431A ND
8431P ND
E840
8430 ND
8430A ND
8430P ND
F712
Z12 ND
Z12A ND
E810
8410 ND
8410A ND
8410P ND
8445
3V NR
8450A
8431A
8440
3V NR
8410A
8411A
MC32
MB01
MC31
ME31
MC12
MPSF1
EM31
ME30 VJ
ME31 VJ
MESF1 VJ
EB03
A10A ND
B860 ND
E918
9018 ND
9018B ND
E917
9017 ND
9017B ND
PSF1
28V GR
9017
9018
MESF1
MPSF1
8V NR
BM04
BM08
BB02 NR
VMF1
4V BE
9040
252
BE
MCV01
EZ01A
Z0004 ND
Z12A ND
7215
12V MR
B08B
M7215
9025K
9024K
8410
8V NR
8470
8450
8410
8471
8431
8411
8451
8V NR
9024H
B08A
9025H
M840
12V NA
7268
7269
7267
16V GR
Z12
16V VE
ME30
MB01
BB60
2V GR
BM04
BM08
40V NR
9018B
9017B
BS11
10V NR
B08
BE
9024
9025
10V BA
9017
1065
9018
CA00
3V NR
1065
BE
A499
6V VE
7267
7269
7268
IC01 10V BE
A10A
A10A
BB00
MCP NR
MMP NR
4V BE
9040
252
BE
MCV01
4V GR
9018B
9017B
A10A
MECV0
CV00
EB08
B08
B08A
B08A
EM40A
M40A
M7215
E905
9025
9025C
9025H
9025K
E904A
9024
9024C
9024H
9024K
E901F
9017
9017B
E901B
9018
9018B
E101A
ME004
ME01
MECV0
MC40
M40A
MC40
18V NR
Z0004
9024C
ME004
9025C
0004
MMP
MM01
MCP
MC10
IC73 34V NR
8470
8471
2V NR
8435
IC71 34V NR
8430
8431
2V NR
8449
IC72 34V NR
8450
8451
2V NR
8430
IC70 34V NR
8410
8411
2V NR
8444
IC91 16V VE
Z12A
ME01
E811
8411 ND
8411A ND
8411P ND

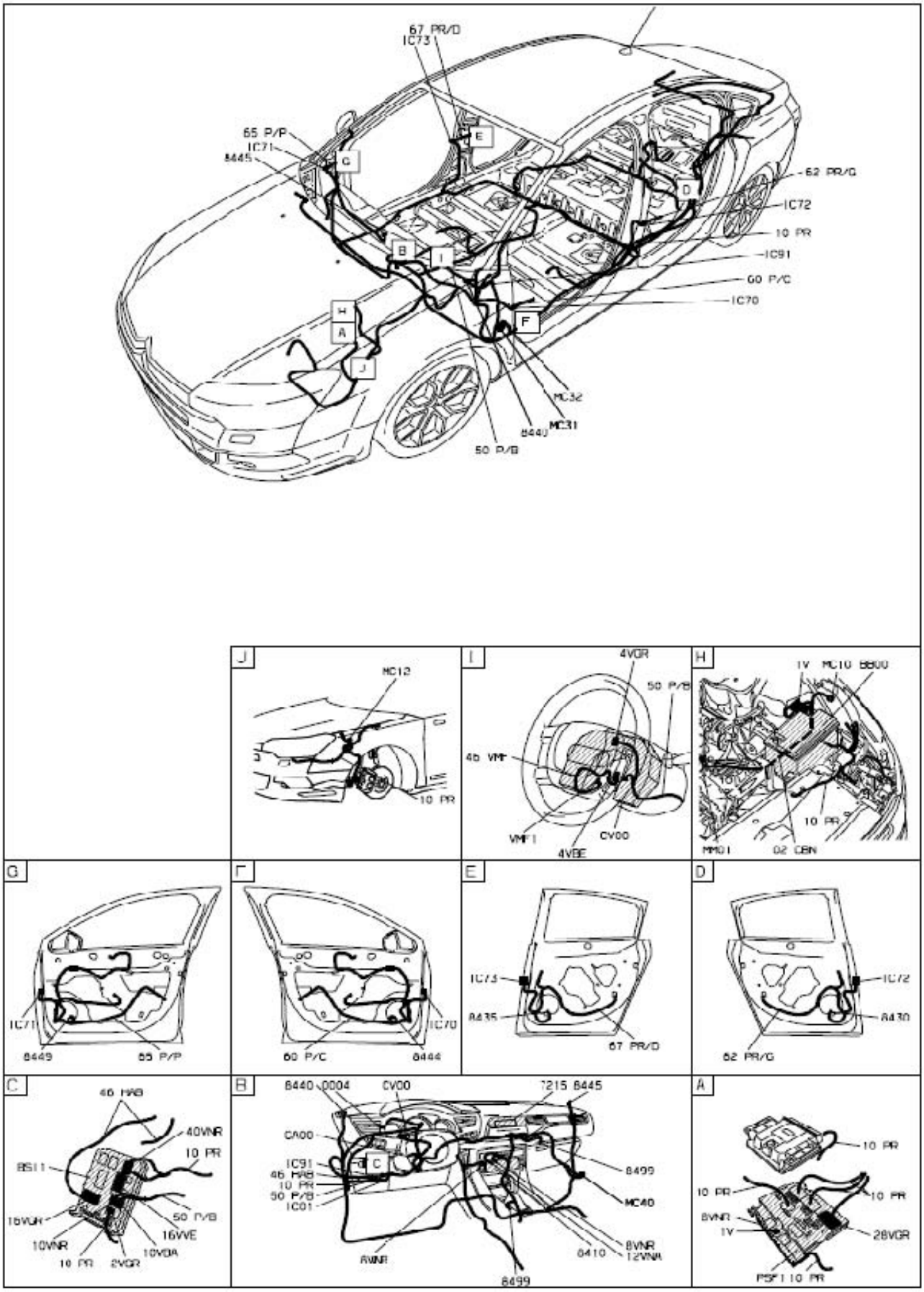
67 PR/O
IC73
65 P/P
IC71
8445
62 PR/O
IC72
10 PR
IC91
60 P/C
IC70
MC32
MC31
8440
50 P/B
J
MC12
10 PR
I
4VGR
50 P/B
46 VMF
VMF1
CV00
4VBE
H
1V
10 PR
MM01
02 OBN
G
IC71
8449
65 P/P
F
IC70
60 P/C
8444
E
IC73
8435
67 PR/O
D
IC72
8430
62 PR/O
C
46 HAB
40VNR
10 PR
BS11
16VGR
50 P/B
16VVE
10VNR
10 PR
2VGR
10VDA
B
8440 0004
CV00
7215 8445
CA00
IC91
46 HAB
10 PR
50 P/B
IC01
8499
MC40
8410
8VNR
12VNR
8VNR
8499
A
10 PR
10 PR
10 PR
8VNR
1V
28VGR
PSF1 10 PR

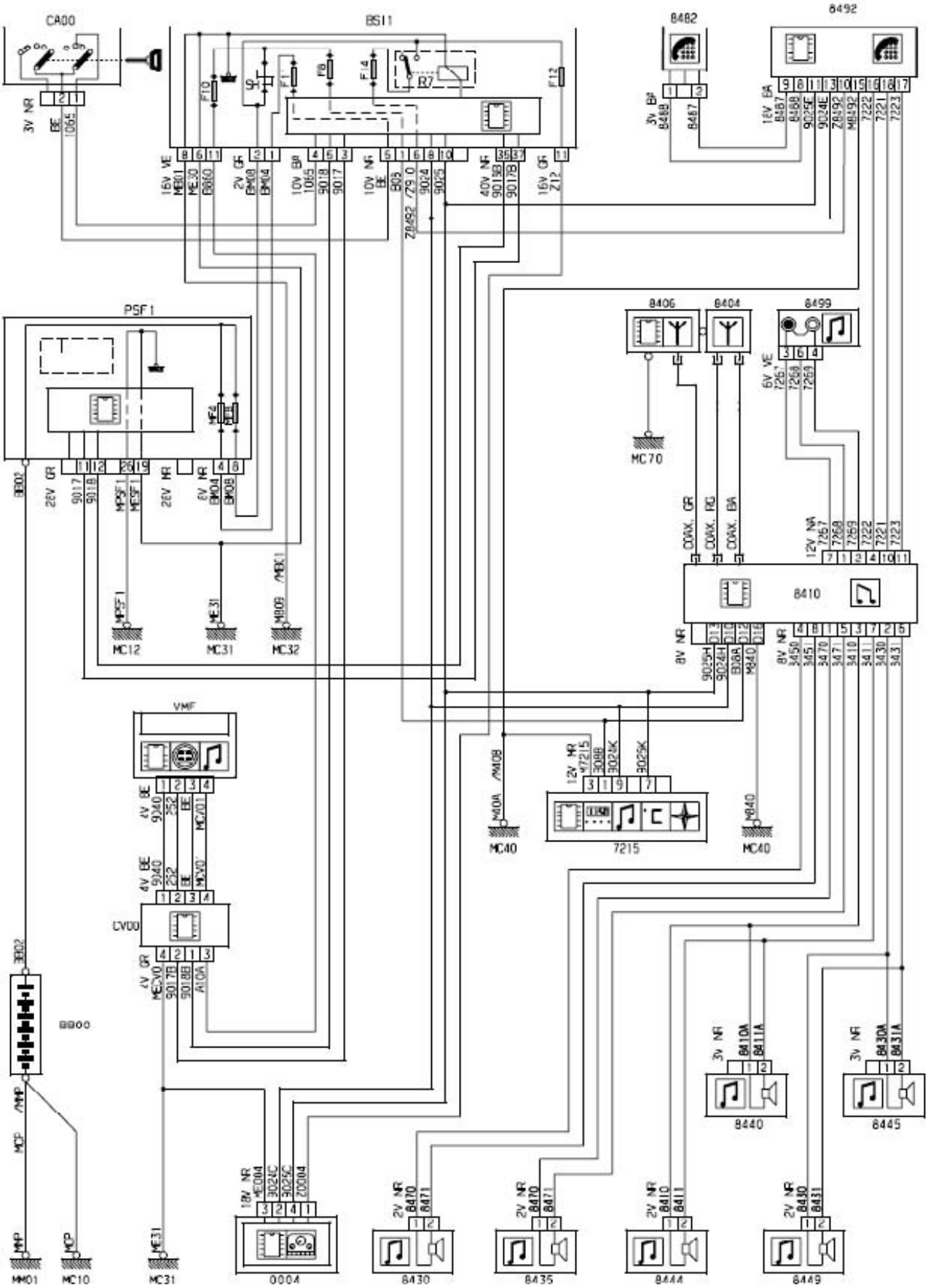
CA00
BS11
8482
8492
PSF1
8406
8404
8499
MC70
8410
MC12
MC31
MC32
VMF
7215
MC40
LV00
8440
8445
0004
8430
8435
8444
8449
MM01
MC10

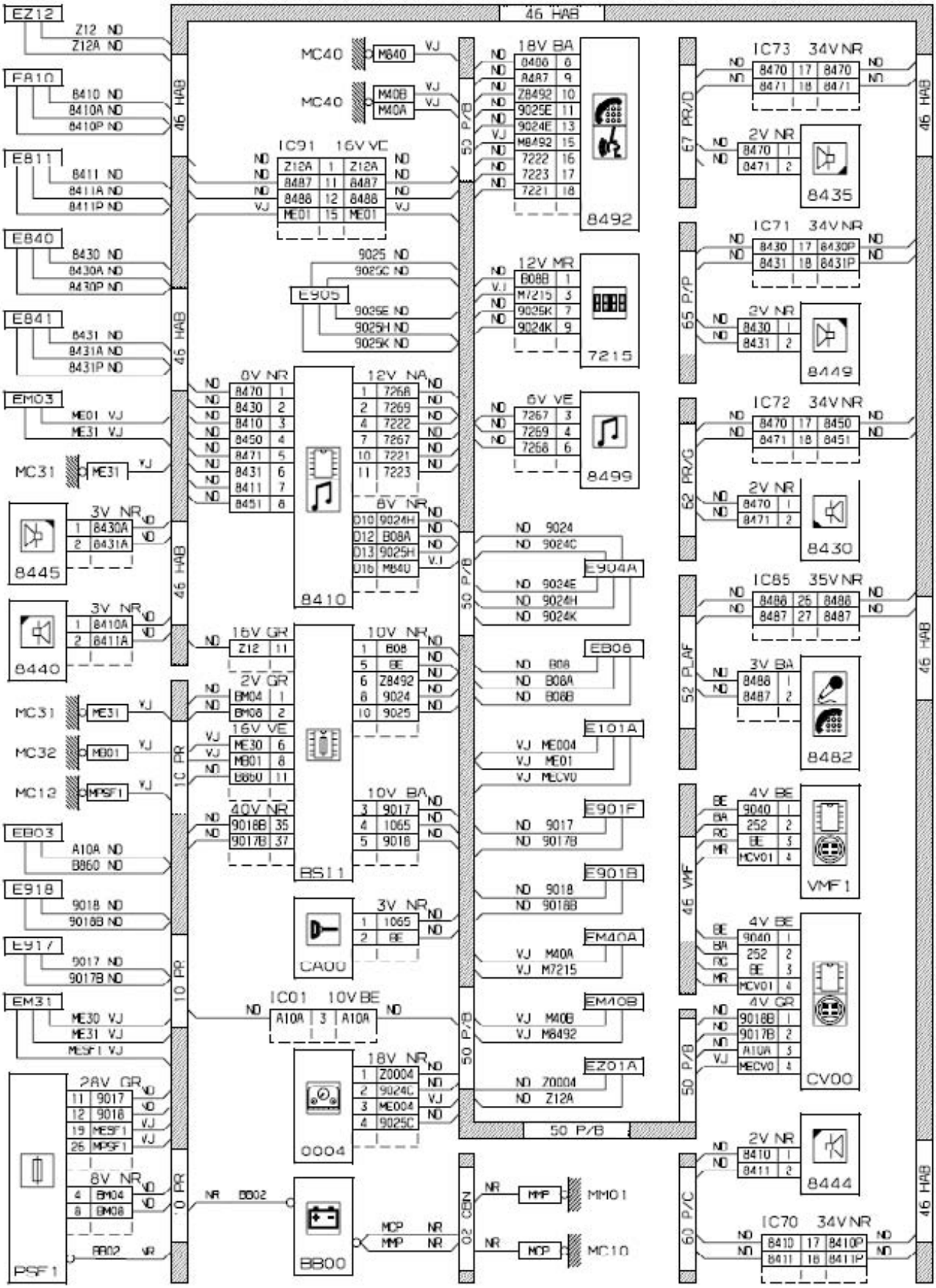
EZ12
FA10
E811
E840
E841
EM03
MC31
8445
8440
MC31
MC32
MC12
EB03
E918
E917
EM31
PSF1
46 HAB
1C PR
10 PR
0 PR
50 P/B
02 CBN
67 PR/D
65 P/P
62 PR/G
52 PLAF
46 VMF
60 P/C
IC91 16V VC
E905
8410
BS11
CA00
IC01 10V BE
0004
BB00
MC40
MM01
MC10
8492
7215
8499
E904A
EB08
E101A
E901F
E901B
EM40A
EM40B
EZ01A
IC73 34V NR
8435
IC71 34V NR
8449
IC72 34V NR
8430
IC85 35V NR
8482
VMF1
CV00
8444
IC70 34V NR

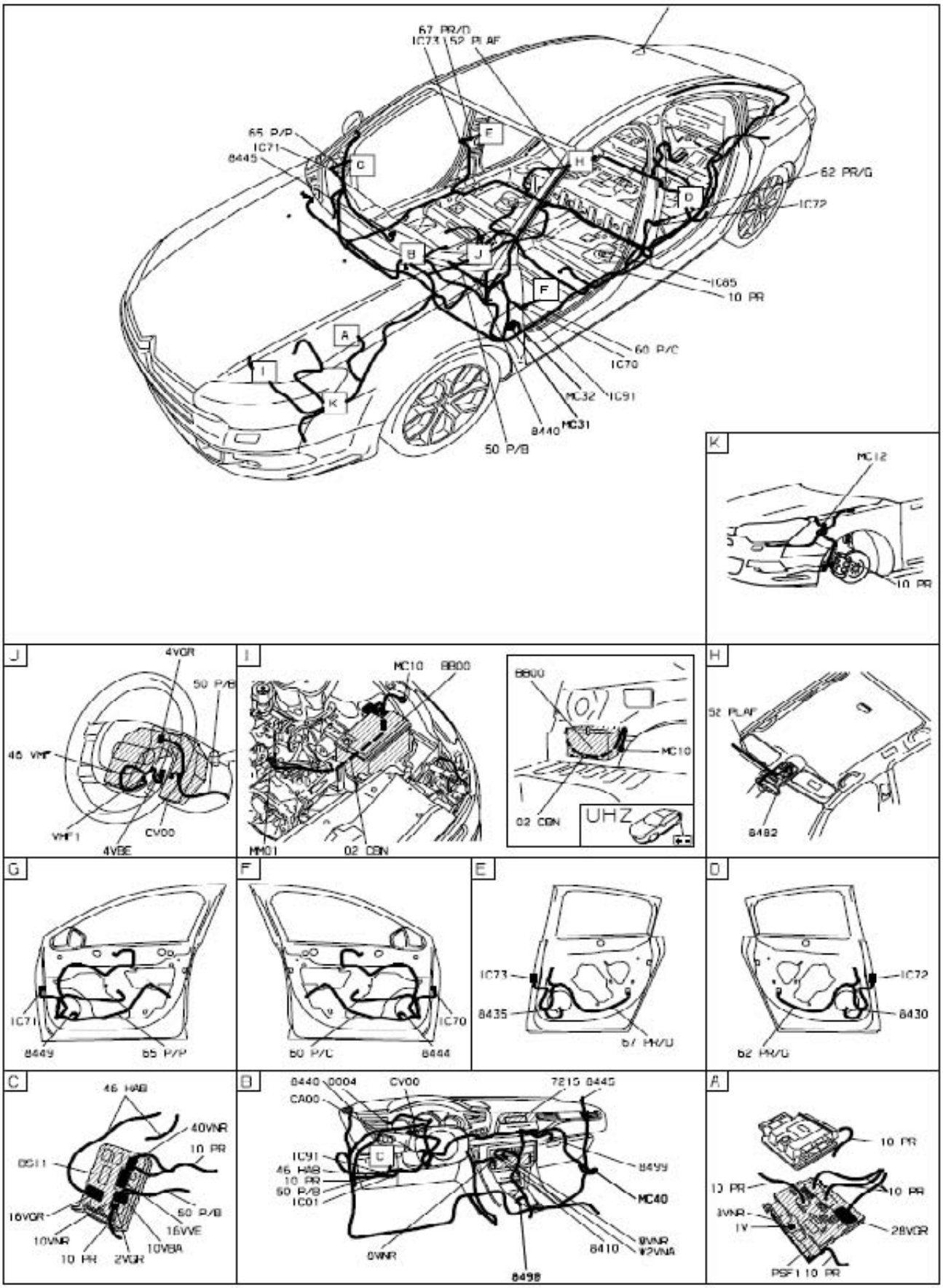
67 PR/D
IC73
52 PLAF
65 P/P
IC71
8445
62 PR/G
IC72
IC85
10 PR
60 P/C
IC70
MC32
IC91
8440
MC31
50 P/B
MC12
10 PR
4VGR
50 P/B
46 VMF
VMF1
CV00
4VBE
MC10
8800
MM01
02 CBN
8800
MC10
02 CBN
UHZ
52 PLAF
8482
IC71
8449
65 P/P
IC70
60 P/C
8444
IC73
8435
67 PR/D
IC72
8430
62 PR/D
46 HAB
40VNR
10 PR
BG11
16VGR
50 P/B
16VVE
10VNR
10VBA
10 PR
2VGR
8440
0004
CV00
CA00
7215
8445
IC91
46 HAB
10 PR
50 P/B
IC01
8499
MC40
8410
8VNR
12VNA
8VNR
8498
10 PR
10 PR
10 PR
3VNR
1V
28VGR
PSF1
10 PR

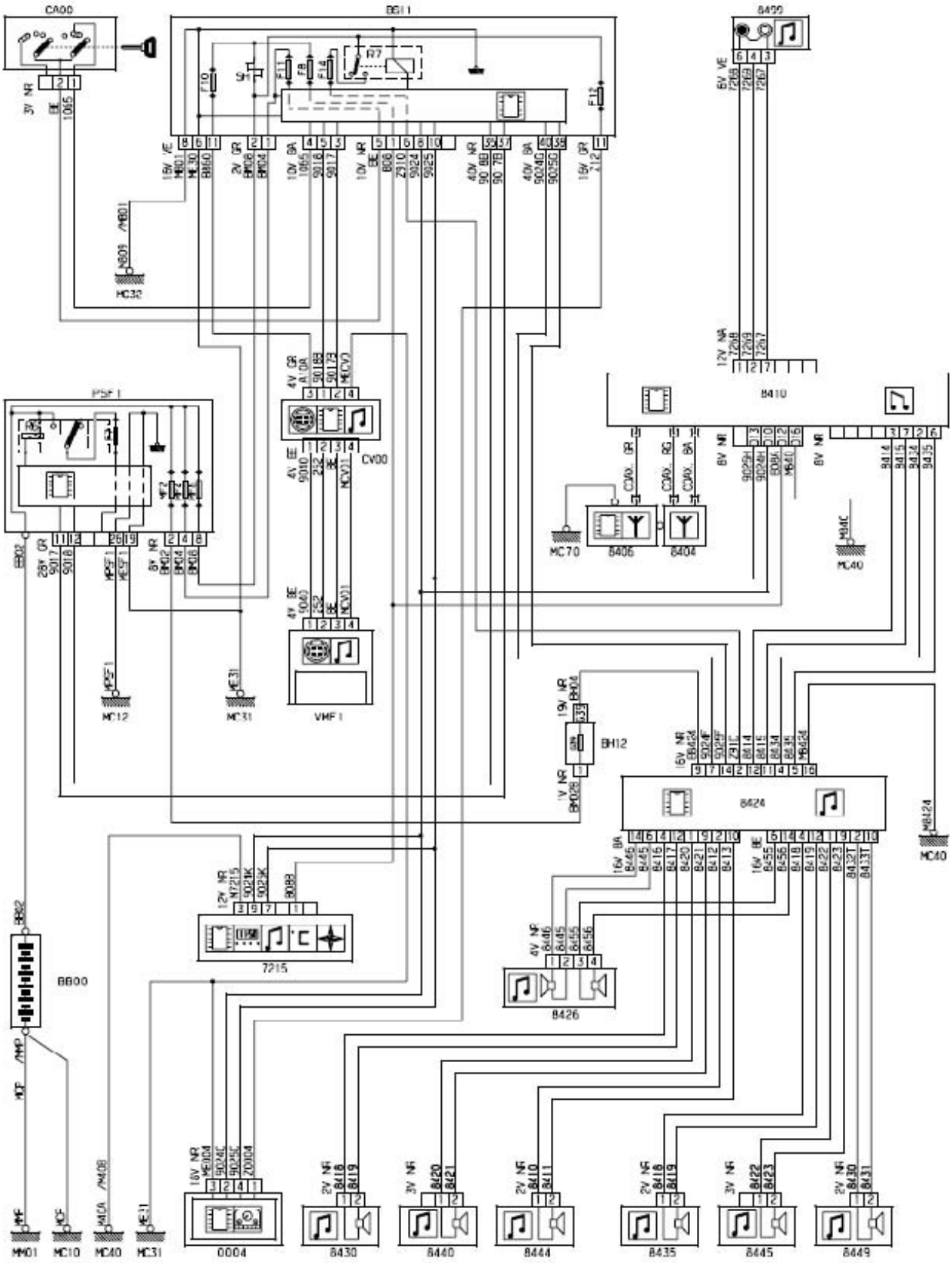
CA00
BS11
8429
8410
PSF1
CV00
VMF1
8406
8404
MC70
MC40
MC12
MC31
BH12
8424
7215
BB00
8426
0004
8430
8440
8444
8435
8445
8449
MM01
MC10

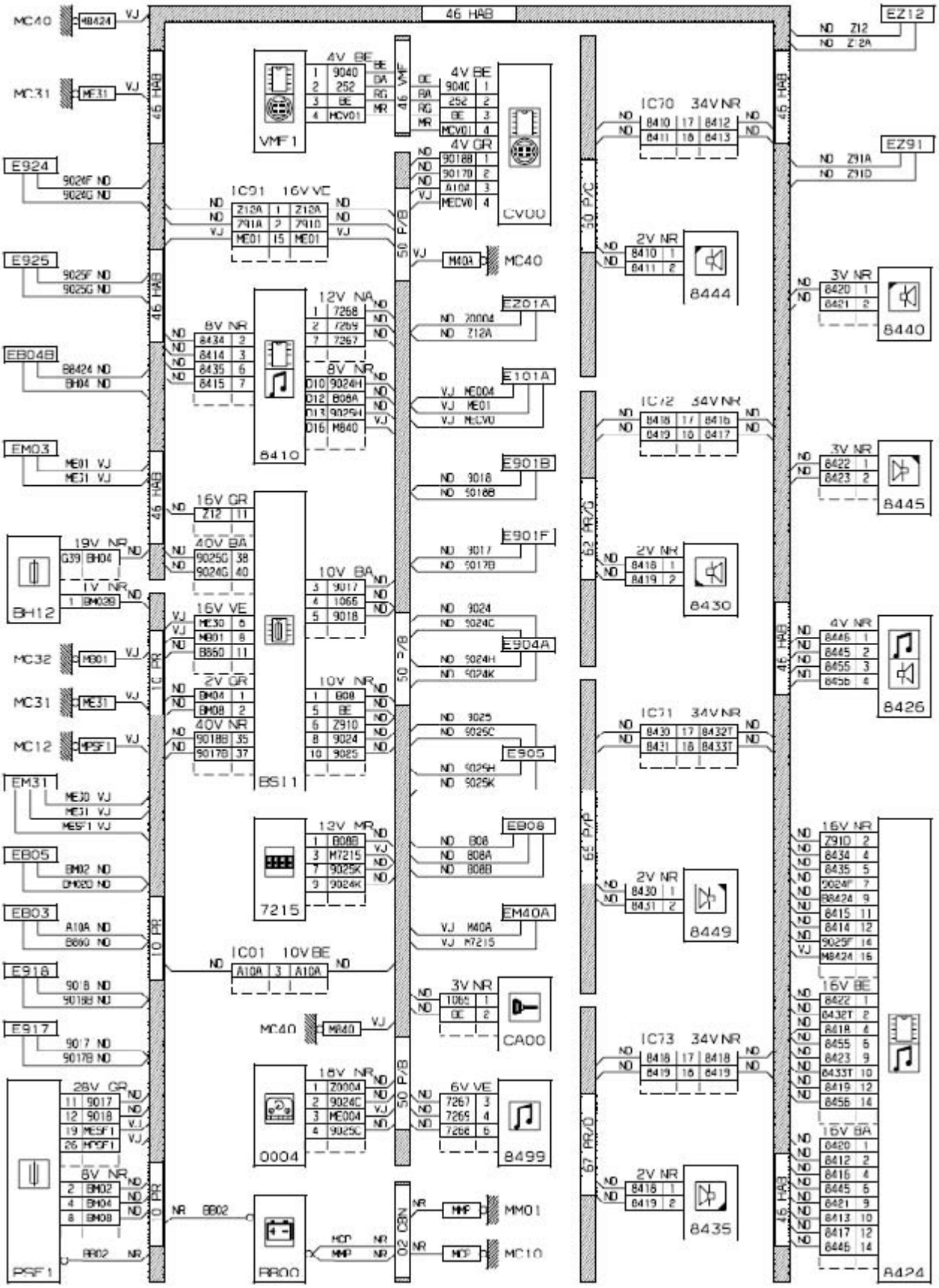
46 HAB
VMF1
CV00
MC40
EZ12
EZ91
E924
E925
EB04B
EM03
BH12
MC32
MC31
MC12
EM31
EB05
EB03
E918
E917
PSF1
8410
BS11
7215
0004
PR00
MM01
MC10
8444
8440
8445
8430
8426
8449
8435
8499
CA00
8424

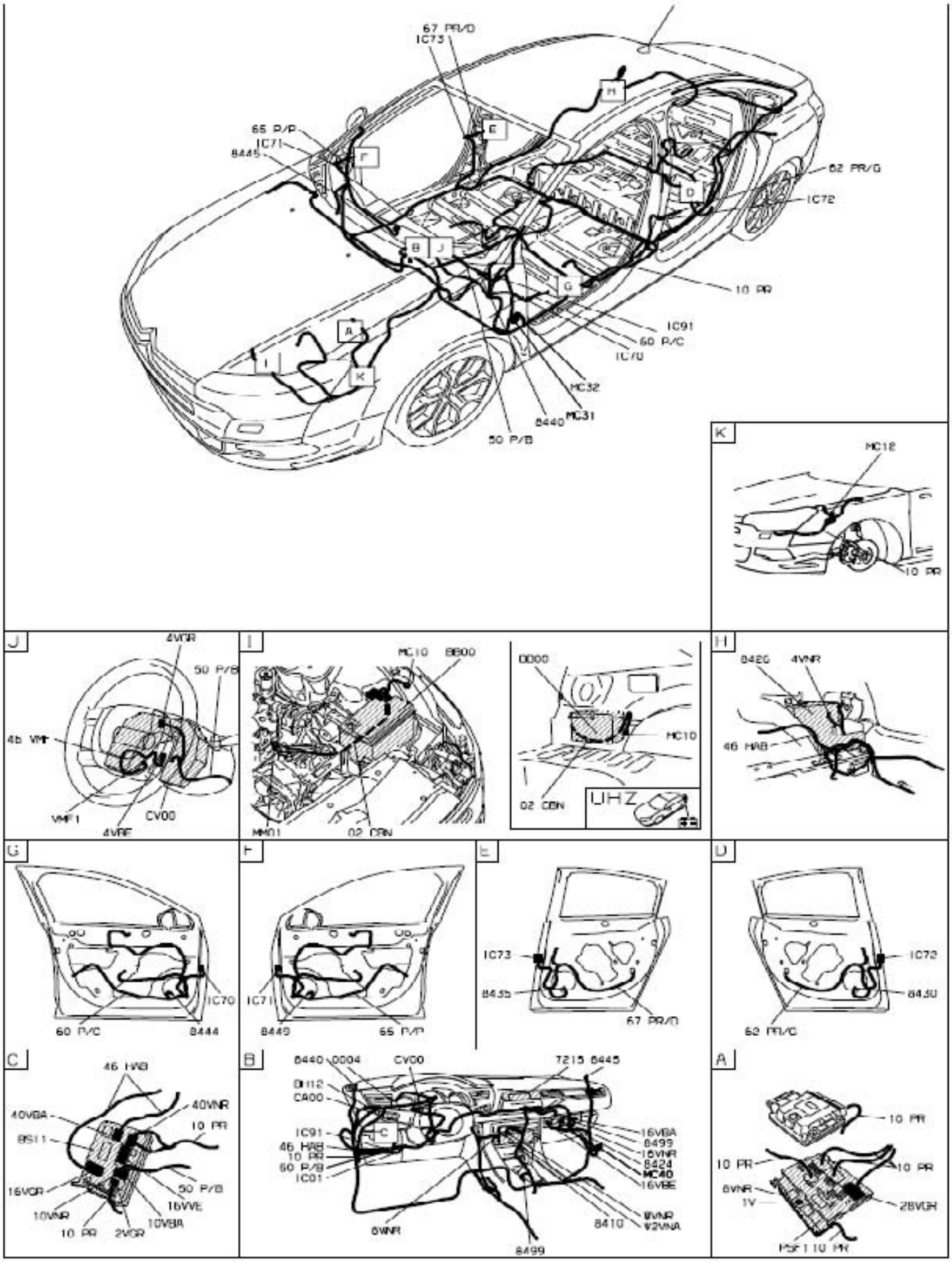
67 PR/O
IC73
65 P/P
IC71
8445
62 PR/G
IC72
10 PR
IC91
60 P/C
IC70
MC32
8440
MC31
50 P/B
MC12
10 PR
4VGR
50 P/B
4b VMF
VMF1
CV00
4VRF
MC10
8800
MM01
02 CBN
0000
MC10
02 CBN
UHZ
8420
4VNR
46 HAB
IC70
60 P/C
8444
IC71
8449
65 P/P
IC73
8455
67 PR/O
IC72
8450
62 PR/G
46 HAB
40VBA
40VNR
10 PR
8511
16VGR
50 P/B
16VVE
10VNR
10VBA
10 PR
2VGR
8440
0004
CV00
7215
8445
0112
CA00
IC91
46 HAB
10 PR
60 P/B
IC01
16VBA
8499
16VNR
8424
MC40
16VBE
8410
8VNR
V2VNA
6VNR
8499
10 PR
10 PR
10 PR
8VNR
1V
2BVGR
PSF1
10 PR

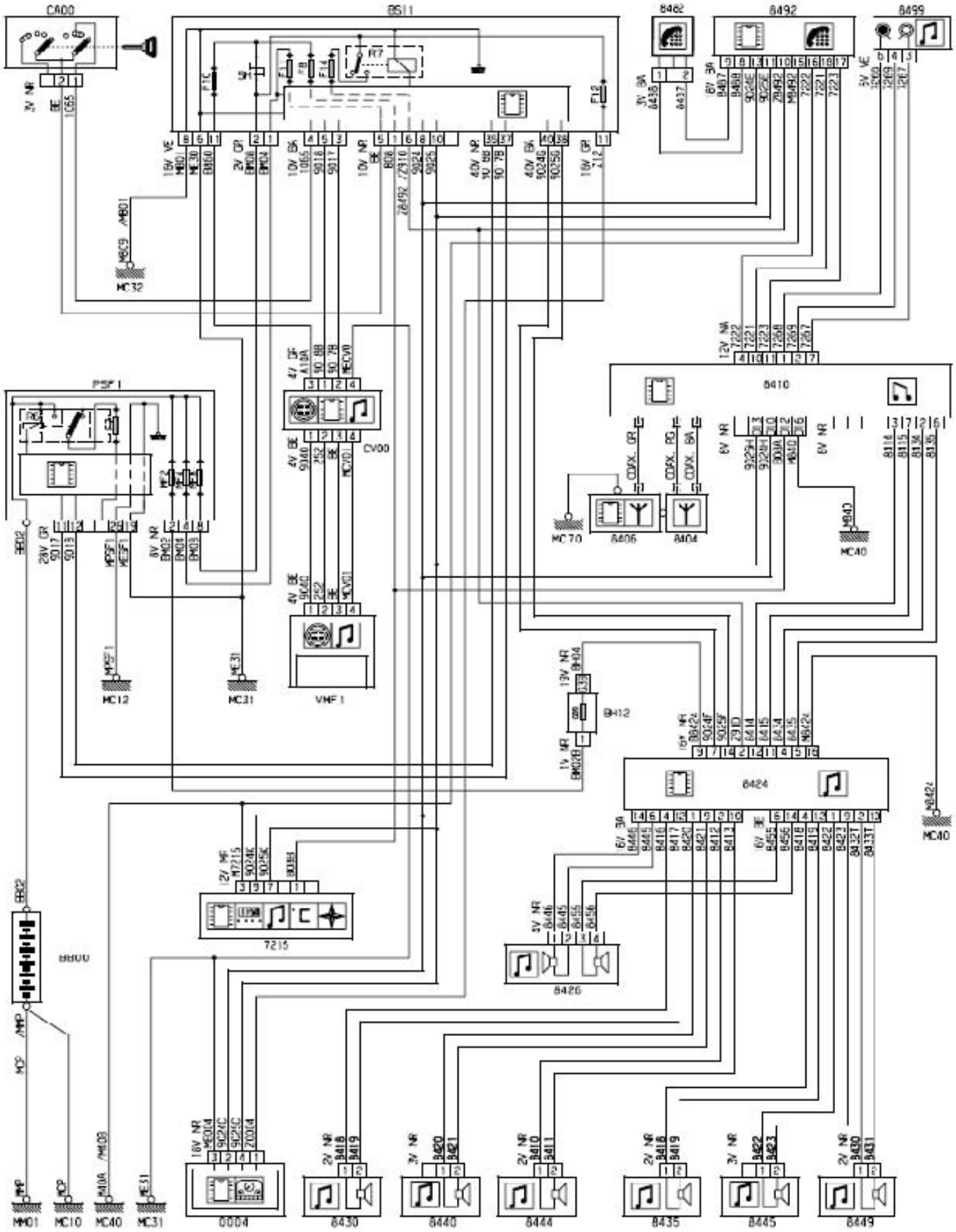
CA00
BS11
8462
8492
8499
8410
8406
8404
8424
8426
7215
0004
8430
8440
8444
8435
8445
8449
CV00
VMF1
MC32
MC12
MC31
MC70
MC40
MM01
MC10

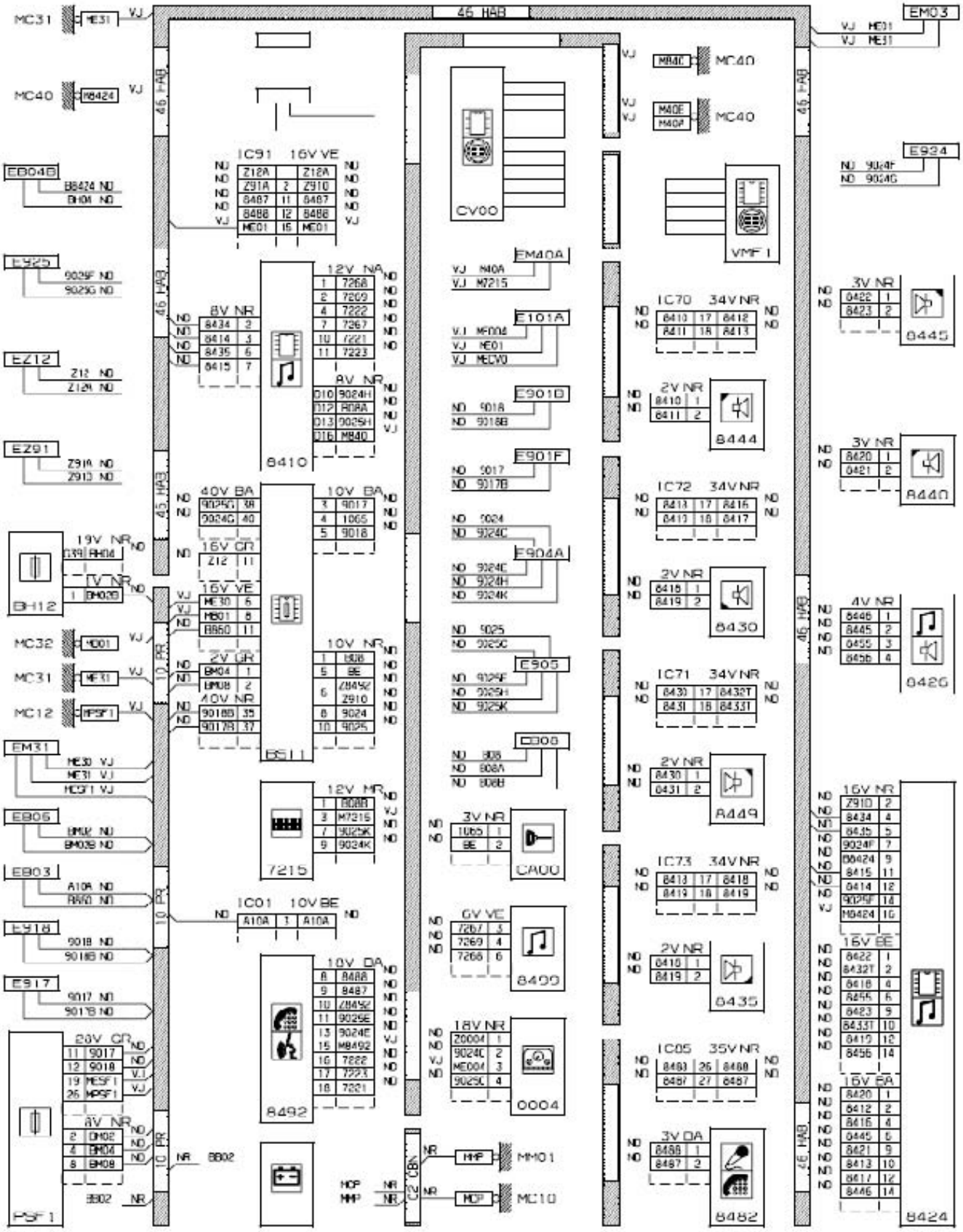
46 HAB
MC31
MC40
EB04B
E925
EZ12
EZ91
BH12
MC32
MC31
MC12
EM31
EB06
EB03
E918
E917
PSF1
8410
8511
7215
8492
CV00
EM40A
E101A
E901D
E901F
E904A
E905
CD00
CA00
8400
0004
MM01
MC10
VMF1
IC70 34V NR
IC72 34V NR
IC71 34V NR
IC73 34V NR
IC05 35V NR
8444
8430
8449
8435
8482
EM03
E924
8445
8440
8426
8424

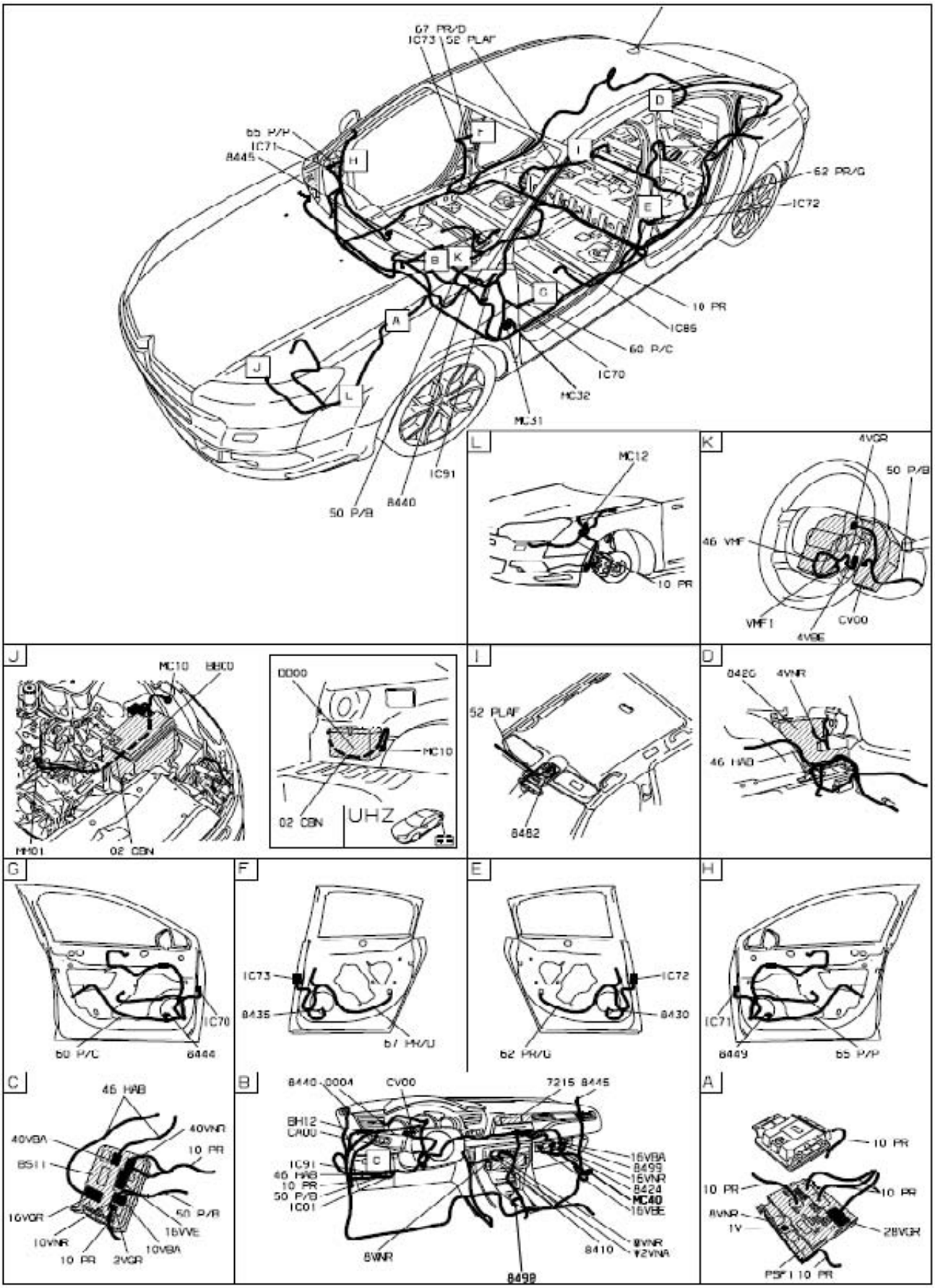
67 PR/D
IC73
52 PLAF
55 P/P
IC71
8445
62 PR/G
IC72
10 PR
IC85
60 P/C
IC70
MC32
MC31
IC91
8440
50 P/B
MC12
4VGR
46 VMF
VMF1
CV00
4VBE
MC10
8800
MM01
02 CBN
0000
UHZ
52 PLAF
8482
0426
4VNR
46 HAB
IC73
8435
67 PR/G
IC72
8430
62 PR/G
IC70
60 P/C
8444
IC71
8449
55 P/P
46 HAB
40VBA
40VNR
10 PR
BS11
16VGR
60 P/R
16VVE
10VNR
10VBA
10 PR
2VGR
8440-0004
CV00
7215 8445
BH12
CA00
IC91
46 HAB
10 PR
50 P/B
IC01
16VBA
8499
16VNR
8424
MC40
16VBE
8410
8VNR
12VNR
8WNR
8499
10 PR
10 PR
10 PR
8VNR
1V
28VGR
P5F1 10 PR

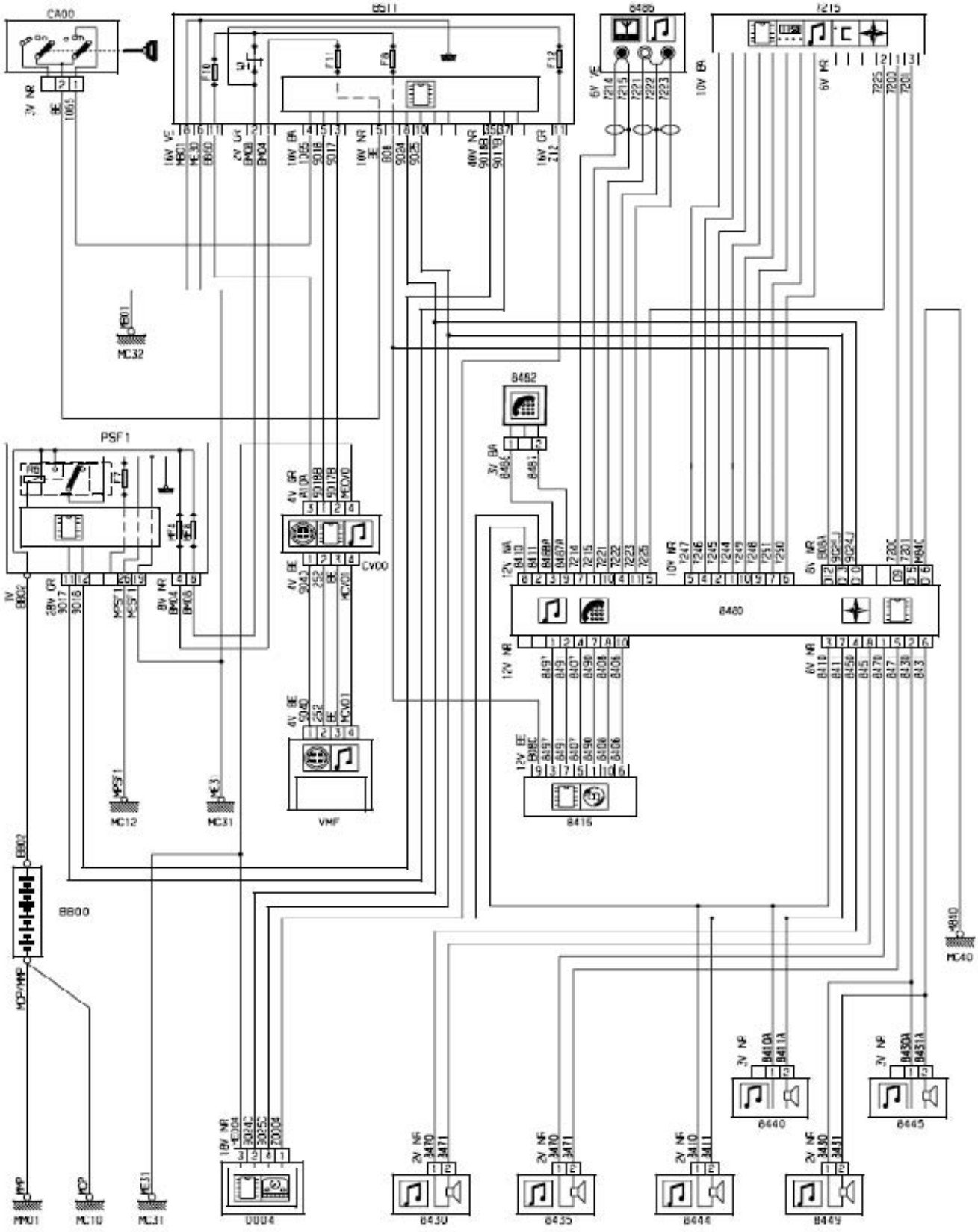
CA00
B511
B486
7215
PSF1
B482
B480
B416
CV00
VMF
B800
MC32
MC12
MC31
MC40
MM01
MC10
0004
B430
B435
B444
B449
B440
B445

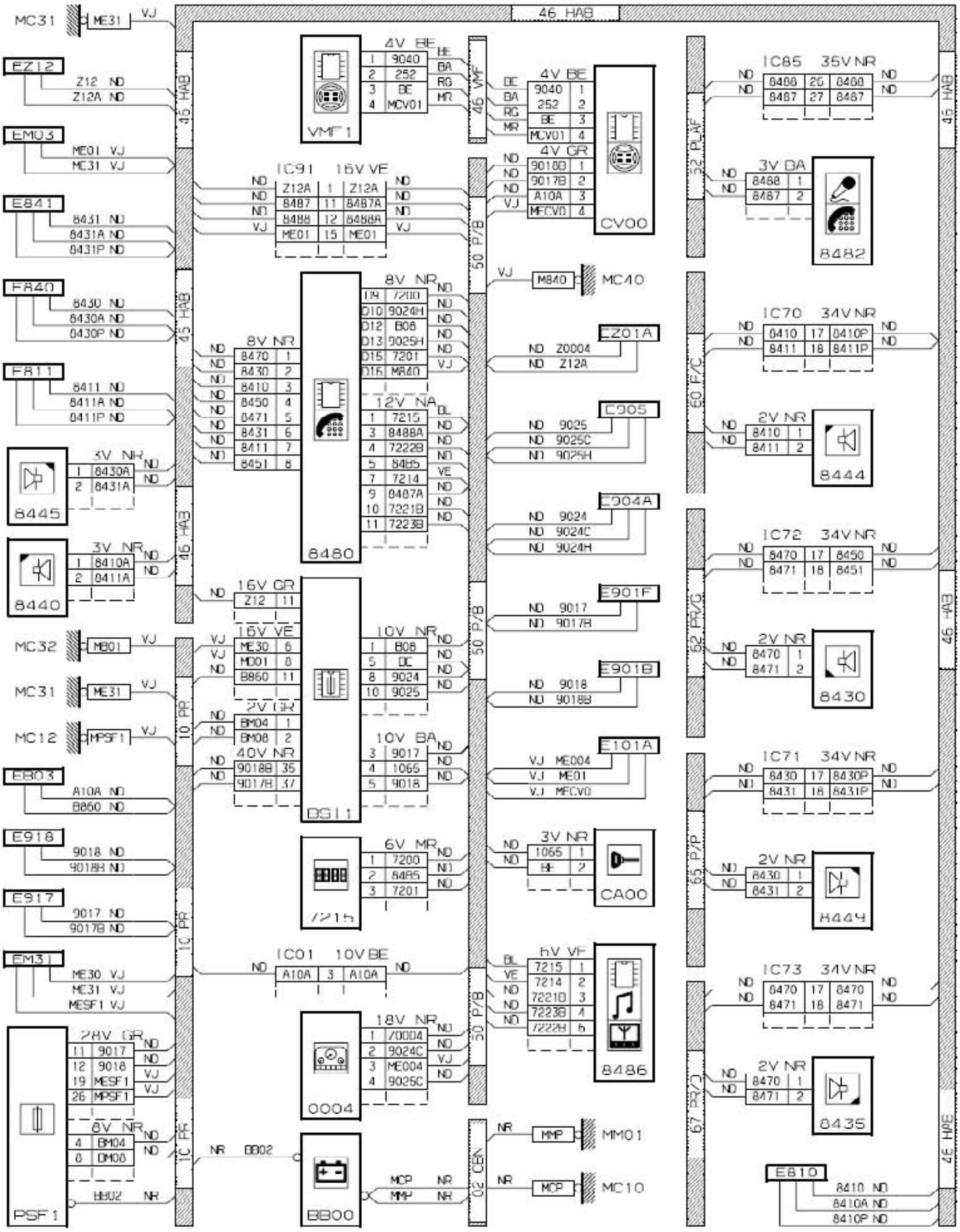
46 HAB
MC31
ME31
EZ12
EM03
E841
F840
F811
8445
8440
MC32
MC31
MC12
EB03
E918
E917
EM31
PSF1
VMF1
IC91 16V VE
8480
DS11
7215
IC01 10V BE
0004
BB00
CV00
MC40
EZ01A
C905
E904A
E901F
E901B
E101A
CA00
8486
MM01
MC10
IC85 35V NR
8482
IC70 34V NR
8444
IC72 34V NR
8430
IC71 34V NR
8444
IC73 34V NR
8435
E810

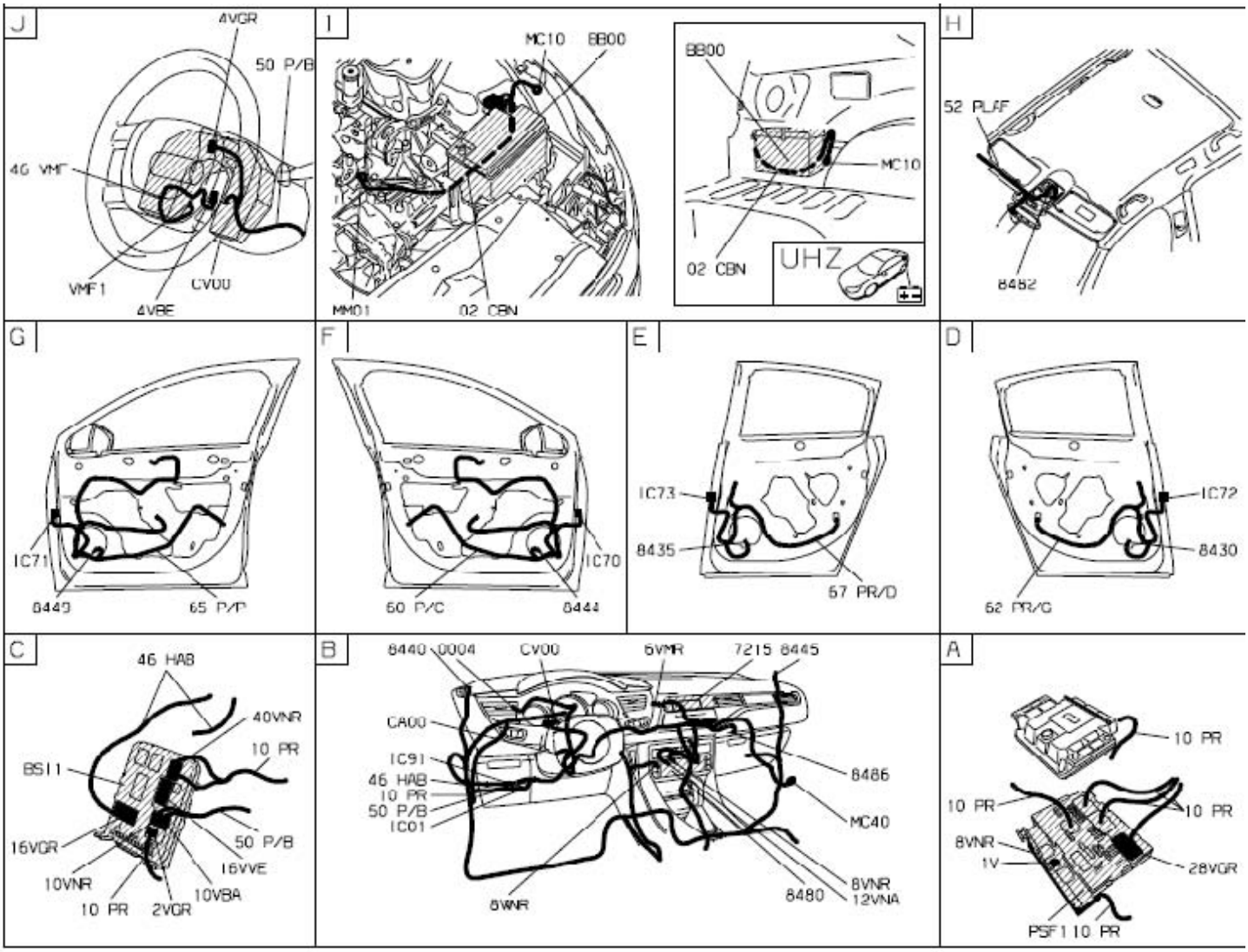
J
4VGR
50 P/B
46 VMF
VMF1
CV00
4VBE
I
MC10
BB00
MM01
02 CBN
BB00
MC10
02 CBN
UHZ
H
52 PLAF
8482
G
IC71
8449
65 P/P
F
IC70
60 P/C
8444
E
IC73
8435
67 PR/D
D
IC72
8430
62 PR/G
C
46 HAB
40VNR
10 PR
BS11
16VGR
50 P/B
16VVE
10VNR
10VBA
10 PR
2VGR
B
8440 0004
CV00
6VMR
7215 8445
CA00
IC91
46 HAB
10 PR
50 P/B
IC01
8486
MC40
8VNR
12VNA
8480
8WNR
A
10 PR
10 PR
10 PR
8VNR
1V
28VGR
PSF1 10 PR

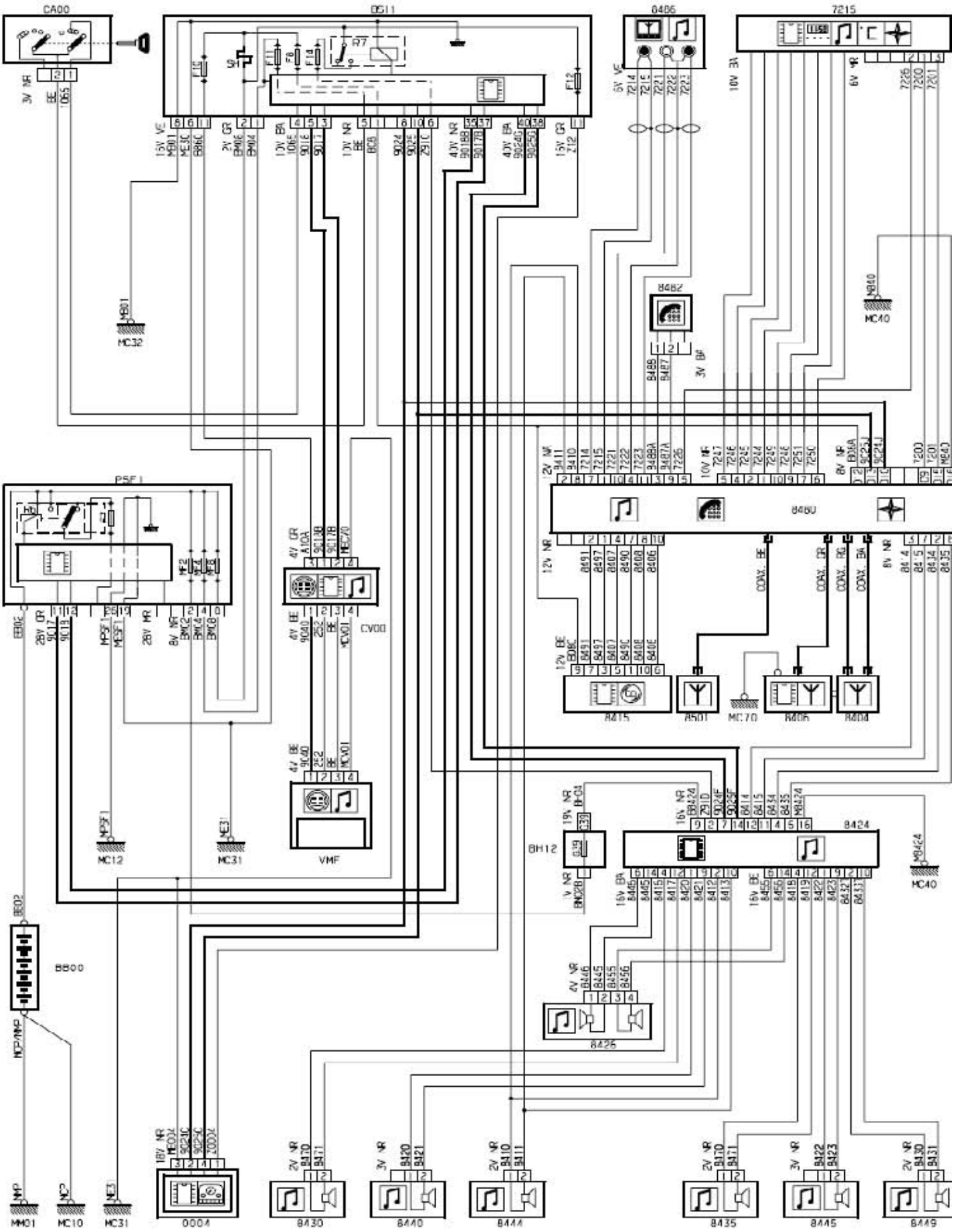
CA00
B511
8486
7215
8482
MC32
MC40
PSF1
8480
8415
8501
MC70
8406
8404
CV00
MC12
MC31
VMF
BH12
8424
8426
8800
0004
8430
8440
8444
8435
8445
8449

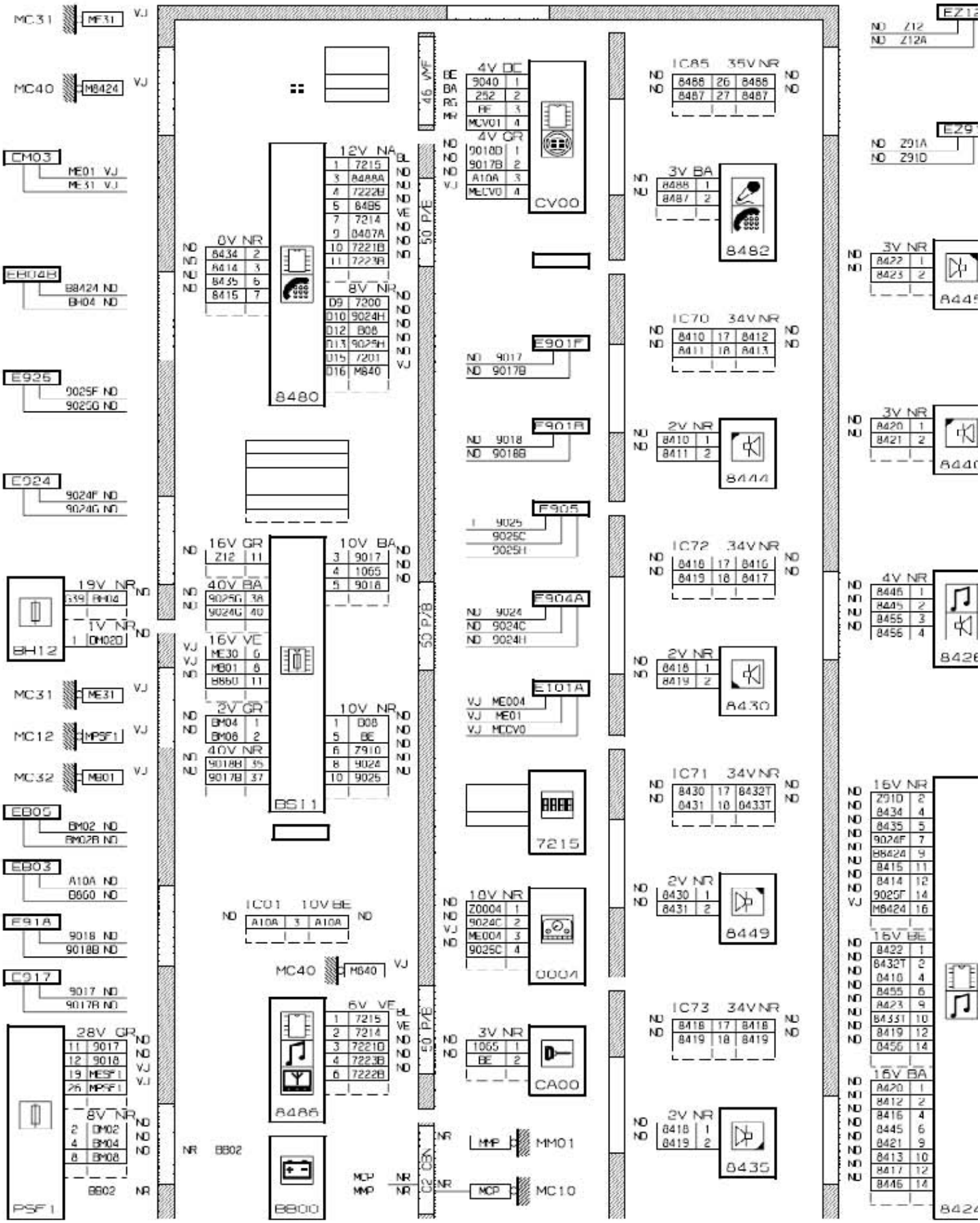
MC31
MC40
CM03
EH04B
E925
C024
BH12
MC31
MC12
MC32
EB05
EB03
F91A
C217
PSF1
8480
BS11
8486
BB00
CV00
E901F
F901A
F905
F904A
E101A
7215
CA00
MM01
MC10
8482
8444
8430
8449
8435
8445
8426
8424

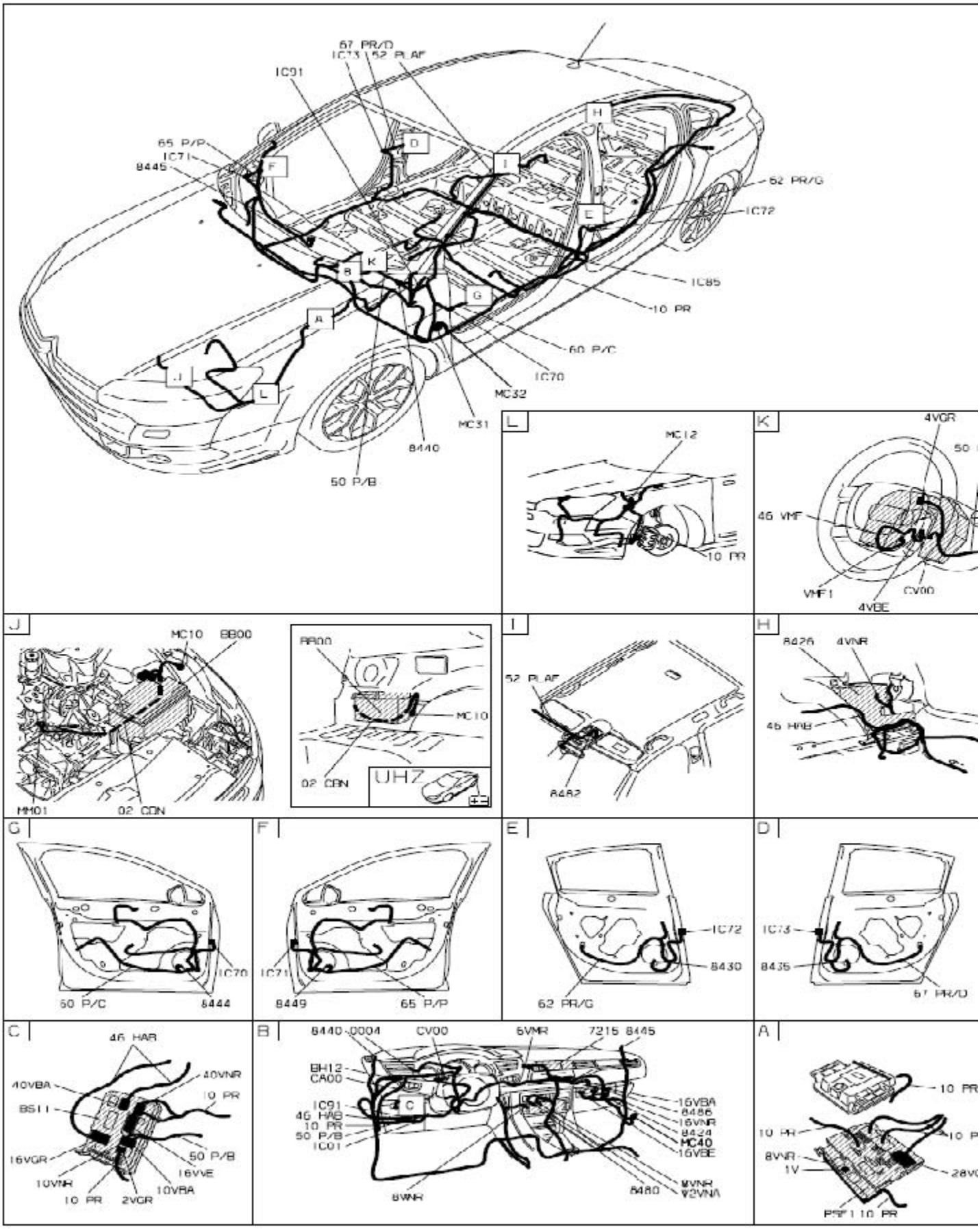
67 PR/D
IC73
52 PLAF
IC91
65 P/P
IC71
8445
62 PR/G
IC72
IC85
10 PR
60 P/C
IC70
MC32
MC31
8440
50 P/B
MC12
10 PR
4VGR
46 VMF
VMF1
CV00
4VBE
MC10
BB00
MM01
02 CDN
BB00
MC10
02 CDN
UHZ
52 PLAF
8482
8426
4VNR
46 HAB
IC70
50 P/C
8444
IC71
8449
65 P/P
IC72
8430
62 PR/G
IC73
8435
67 PR/D
46 HAB
40VBA
40VNR
10 PR
BS11
16VGR
50 P/B
16VVE
10VNR
10VBA
10 PR
2VGR
8440-0004
CV00
6VMR
7215 8445
BH12
CA00
IC91
46 HAB
10 PR
50 P/B
IC01
16VBA
8486
16VNR
8424
MC40
16VBE
8480
8WNR
10 PR
10 PR
8VNR
1V
28V
PSF1 10 PR

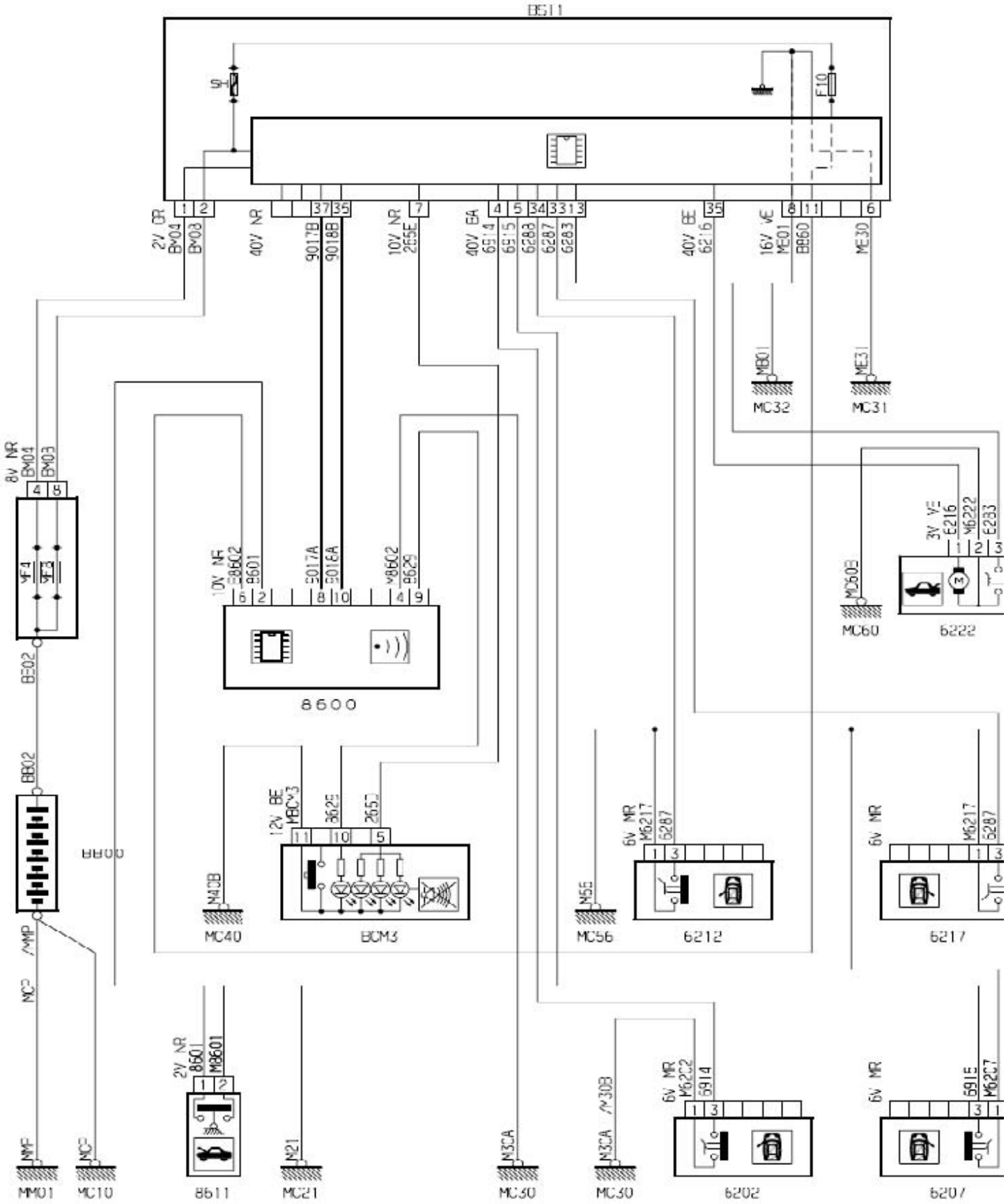
B611
F10
8600
BCM3
6212
6217
6222
6202
6207
8611
MC32
MC31
MC60
MC40
MC56
MC21
MC30
MM01
MC10

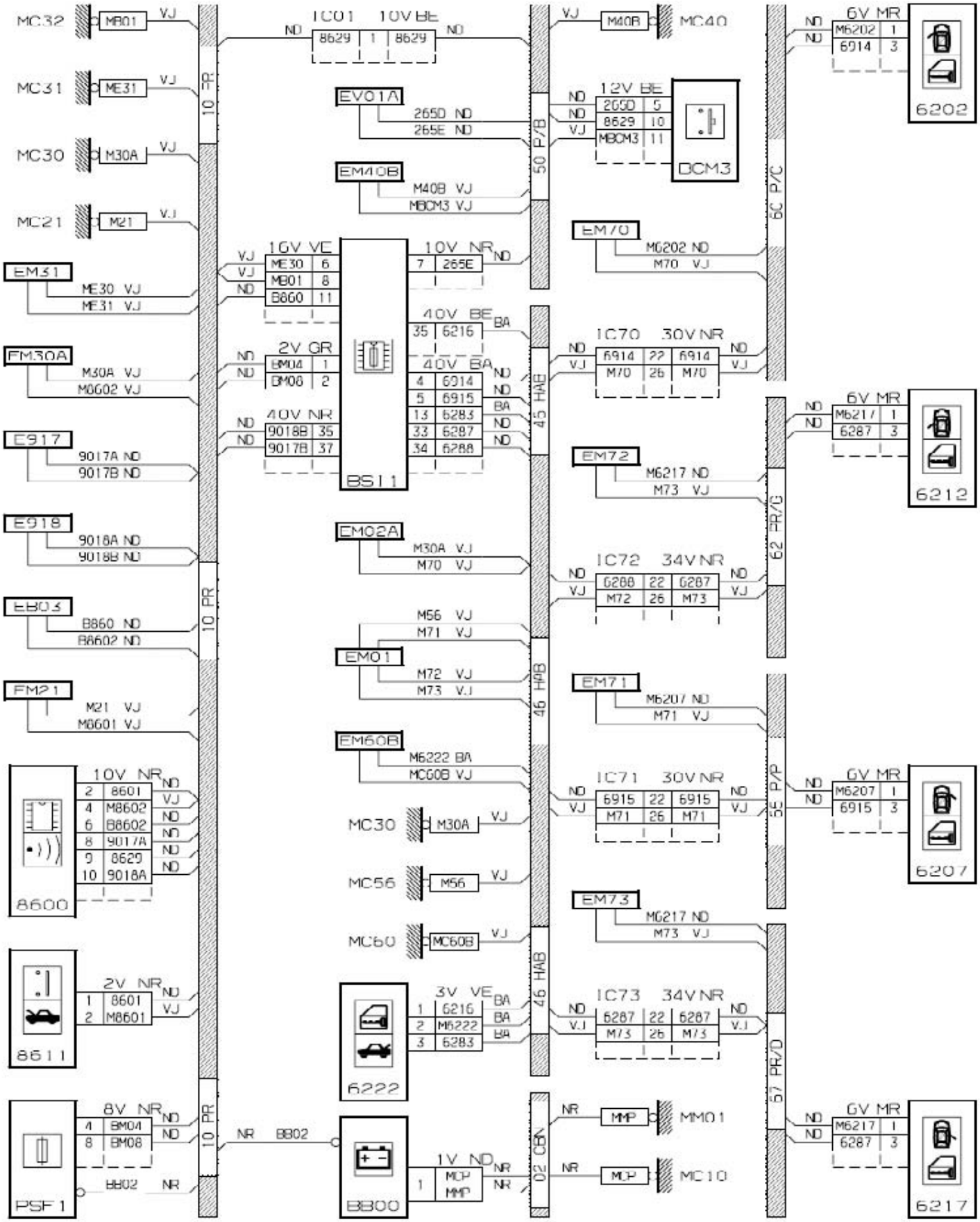
MC32
MB01
VJ
MC31
ME31
MC30
M30A
MC21
M21
EM31
ME30 VJ
ME31 VJ
FM30A
M30A VJ
M8602 VJ
E917
9017A ND
9017B ND
E918
9018A ND
9018B ND
EB03
B860 ND
B8602 ND
FM21
M21 VJ
M8601 VJ
10 PR
10V NR
8601
M8602
B8602
9017A
8629
9018A
8600
2V NR
8601
M8601
8611
8V NR
BM04
BM08
PSF1
B802 NR
1C01 10V BE
8629 1 8629
ND
EV01A
2650 ND
265E ND
EM40B
M40B VJ
MBCM3 VJ
16V VE
ME30 6
MB01 8
B860 11
2V GR
BM04 1
BM08 2
40V NR
9018B 35
9017B 37
BS11
10V NR
7 265E
40V BE
35 6216
40V BA
4 6914
5 6915
13 6283
33 6287
34 6288
EM02A
M30A VJ
M70 VJ
M56 VJ
M71 VJ
EM01
M72 VJ
M73 VJ
EM60B
M6222 BA
MC60B VJ
MC30
MC56
MC60
3V VE
1 6216
2 M6222
3 6283
6222
1V ND
MCP
MMP
BB00
50 P/B
45 HAB
46 HAB
02 CBX
M40B
MC40
12V BE
2650 5
8629 10
MBCM3 11
DCM3
EM70
M6202 ND
M70 VJ
1C70 30V NR
6914 22 6914
M70 26 M70
EM72
M6217 ND
M73 VJ
1C72 34V NR
6288 22 6287
M72 26 M73
EM71
M6207 ND
M71 VJ
1C71 30V NR
6915 22 6915
M71 26 M71
EM73
M6217 ND
M73 VJ
1C73 34V NR
6287 22 6287
M73 26 M73
MMP
MMO1
MCP
MC10
6C P/C
6V MR
M6202 1
6914 3
6202
62 PR/G
M6217 1
6287 3
6212
5E P/P
M6207 1
6915 3
6207
57 PR/D
M6217 1
6287 3
6217

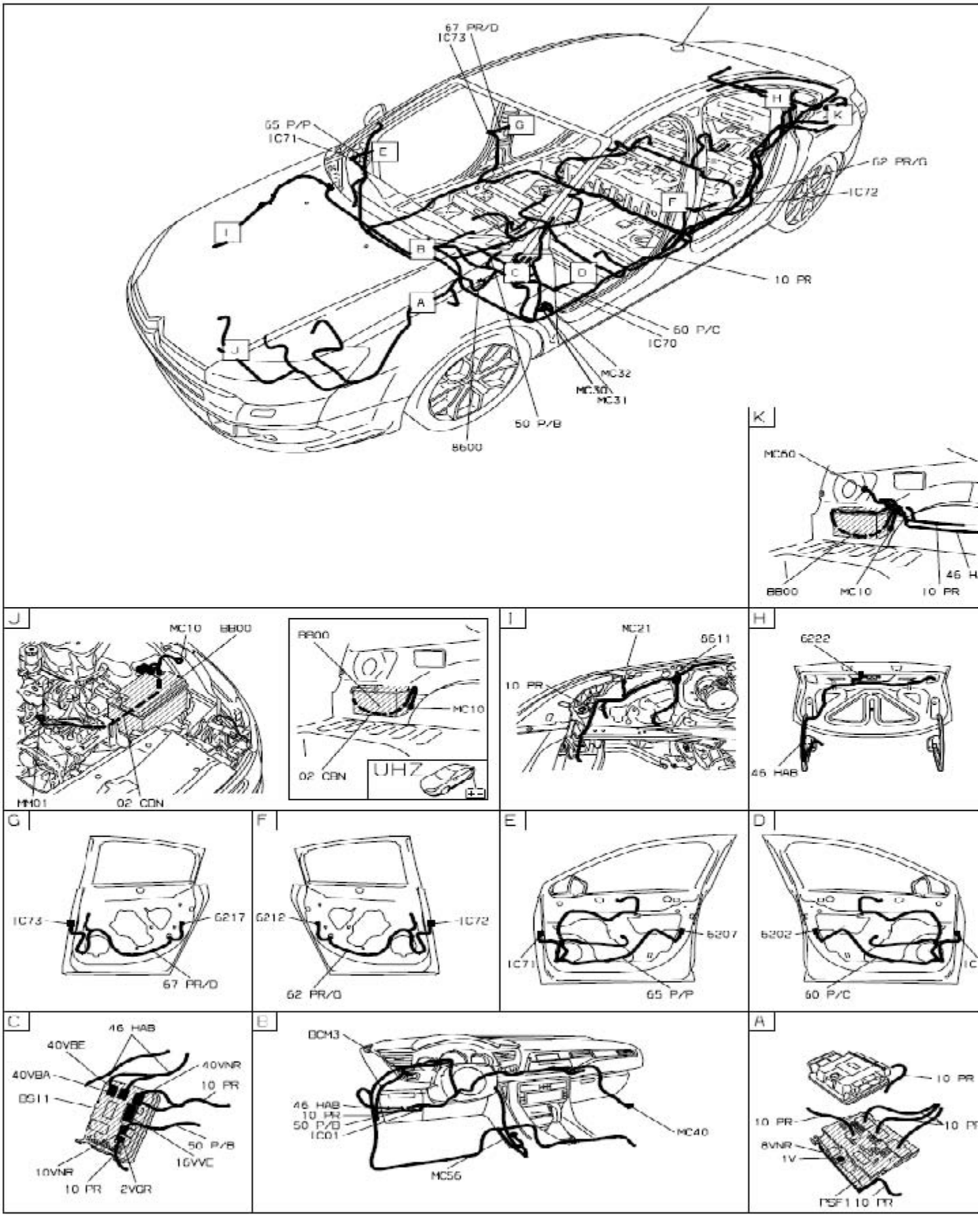
67 PR/D
IC73
65 P/P
IC71
62 PR/D
IC72
10 PR
60 P/C
IC70
MC32
MC30
MC31
50 P/B
8600
K
MC50
8800
MC10
10 PR
46 H
J
MC10
8800
MM01
02 CDN
8800
MC10
02 CDN
UH7
I
MC21
6611
10 PR
H
6222
46 HAB
G
IC73
6217
67 PR/D
F
6212
IC72
62 PR/D
E
6207
IC71
65 P/P
D
6202
60 P/C
C
46 HAB
40VBE
40VBA
40VNR
10 PR
BG11
50 P/B
10VVC
10VNR
10 PR
2VGR
B
BCM3
46 HAB
10 PR
50 P/B
IC01
MC40
MC56
A
10 PR
10 PR
8VNR
1V
PSF110 PR