1E - ENGINE ELECTRICAL

LAUNCH

LAUNCH

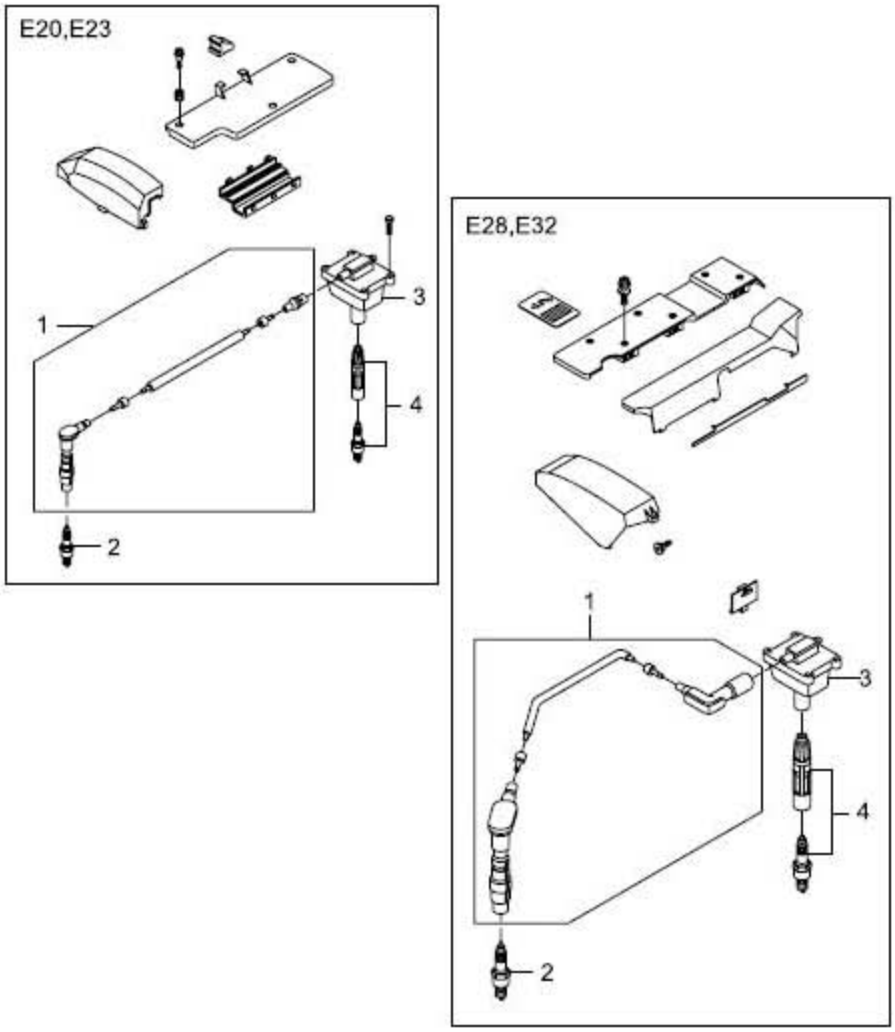
E20,E23
1
2
3
4
E28,E32
1
2
3
4

ENGINE ELECTRICAL - IGNITION CABLE (151)

NO.	OPERATION DESCRIPTION	OPERATION CODE	CM		MU/KO		RX	
			2.0/ 2.3	2.8/ 3.2	2.0/ 2.3	2.8/ 3.2	2.0/ 2.3	2.8/ 3.2
1	WIRES, SPARK PLUG(ONE OR TWO) DOHC - REPLACE	1510200	0.2	0.2	0.2	0.2	0.2	0.2
	WIRES, SPARK PLUG(ALL) DOHC - REPLACE	1510500	0.3	0.3	0.3	0.3	0.3	0.3
2	PLUGS, SPARK(ONE OR TWO) DOHC - REPLACE	1510900	0.4	0.5	0.4	0.5	0.4	0.5
	PLUGS, SPARK(ALL) DOHC - REPLACE	1511200	0.5	0.7	0.5	0.7	0.5	0.7
3	COIL, IGNITION CONTROL DOHC - REPLACE	1511400	0.3	0.3	0.3	0.3	0.3	0.3
	A - Replace each additional	151140A	0.1	0.1	0.1	0.1	0.1	0.1
4	PLUG, COUPLING - REPLACE	1511600	0.3	0.3	0.3	0.3	0.3	0.3
	A - Replace each additional	151160A	0.1	0.1	0.1	0.1	0.1	0.1

LAUNCH
LAUNCH

CM : CHAIRMAN, MU : MUSSO, KO : KORANDO, RX : REXTON

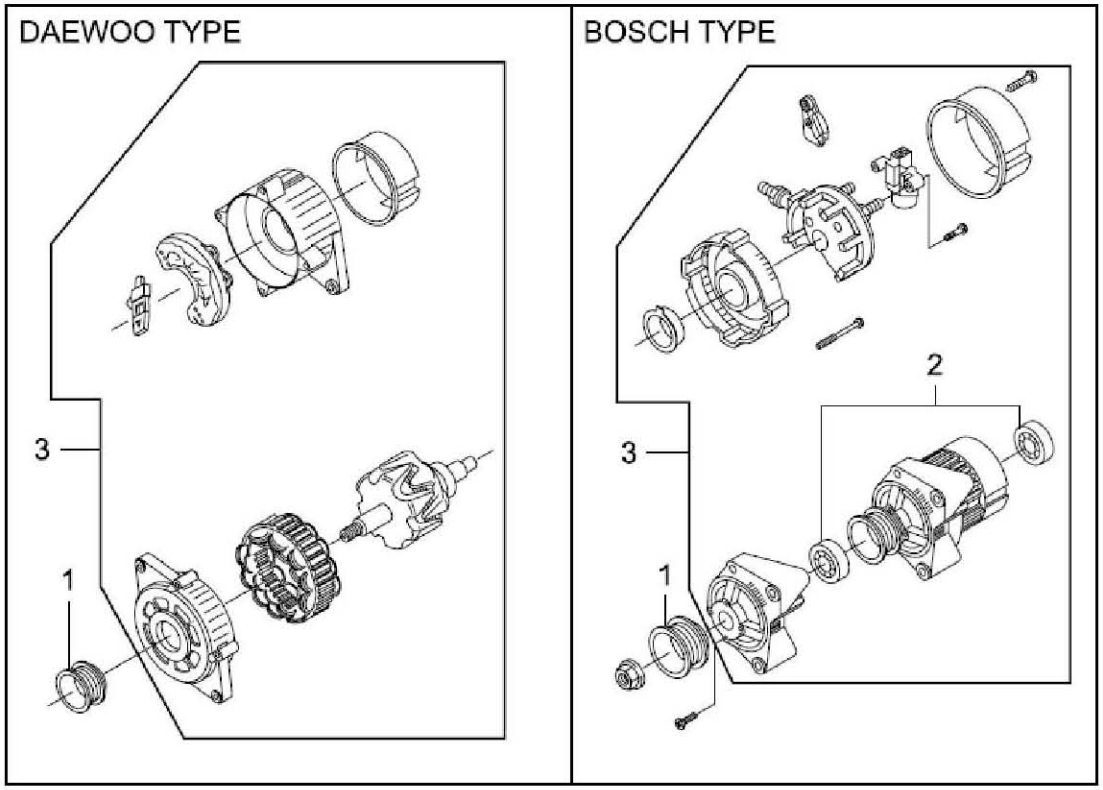
DAEWOO TYPE
3
1
BOSCH TYPE
2
3
1

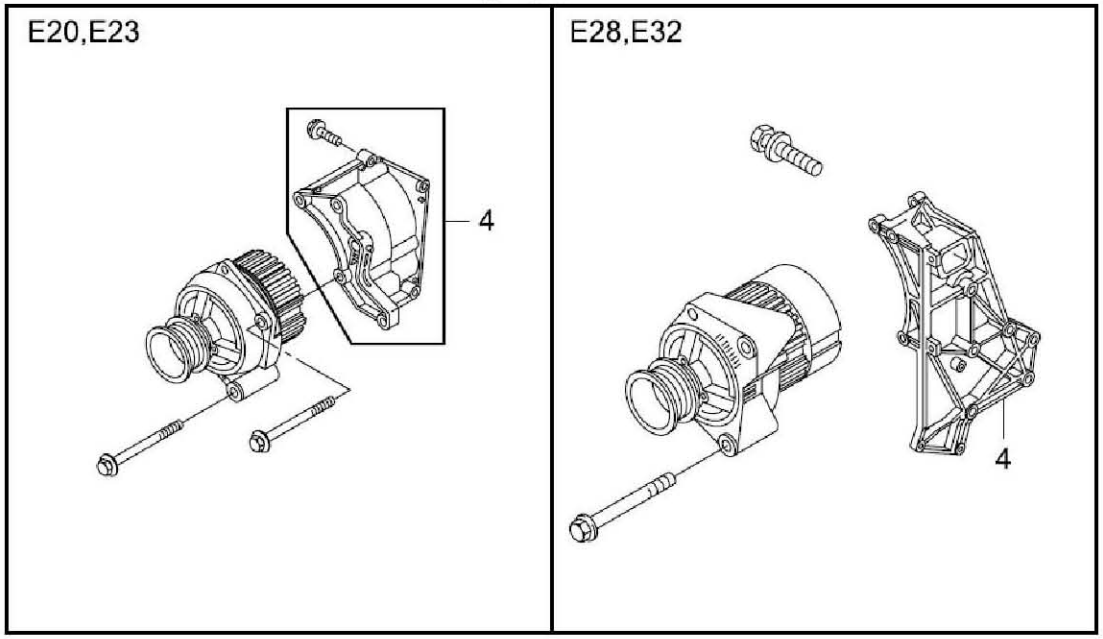
E20,E23
4
E28,E32
4

ENGINE ELECTRICAL - ALTERNATOR UNIT (154)

NO.	OPERATION DESCRIPTION	OPERATION CODE	CM		MU/KO		RX	
			2.0/ 2.3	2.8/ 3.2	2.0/ 2.3	2.8/ 3.2	2.0/ 2.3	2.8/ 3.2
1	PULLEY AND/OR FAN, ALTERNATOR - REPLACE	1540100	0.6	0.6	0.5	0.5	0.5	0.5
2	BEARING, ALTERNATOR-REPLACE							
	Front	1540300	0.8	0.8	0.8	0.8	0.8	0.8
	Rear	1540500	0.8	0.8	0.8	0.8	0.8	0.8
3	ALTERNATOR ASSEMBLY - REPLACE	1541700	0.8	0.8	0.8	0.8	0.8	0.8
	ALTERNATOR ASSEMBLY - OVERHAUL	1541900	1.4	1.4	1.5	1.5	1.5	1.5
4	BRACKET, ALTERNATOR MOUNTING - REPLACE	1544100	1.2	1.2	1.2	1.2	1.2	1.2

LAUNCH

CM : CHAIRMAN, MU : MUSSO, KO : KORANDO, RX : REXTON

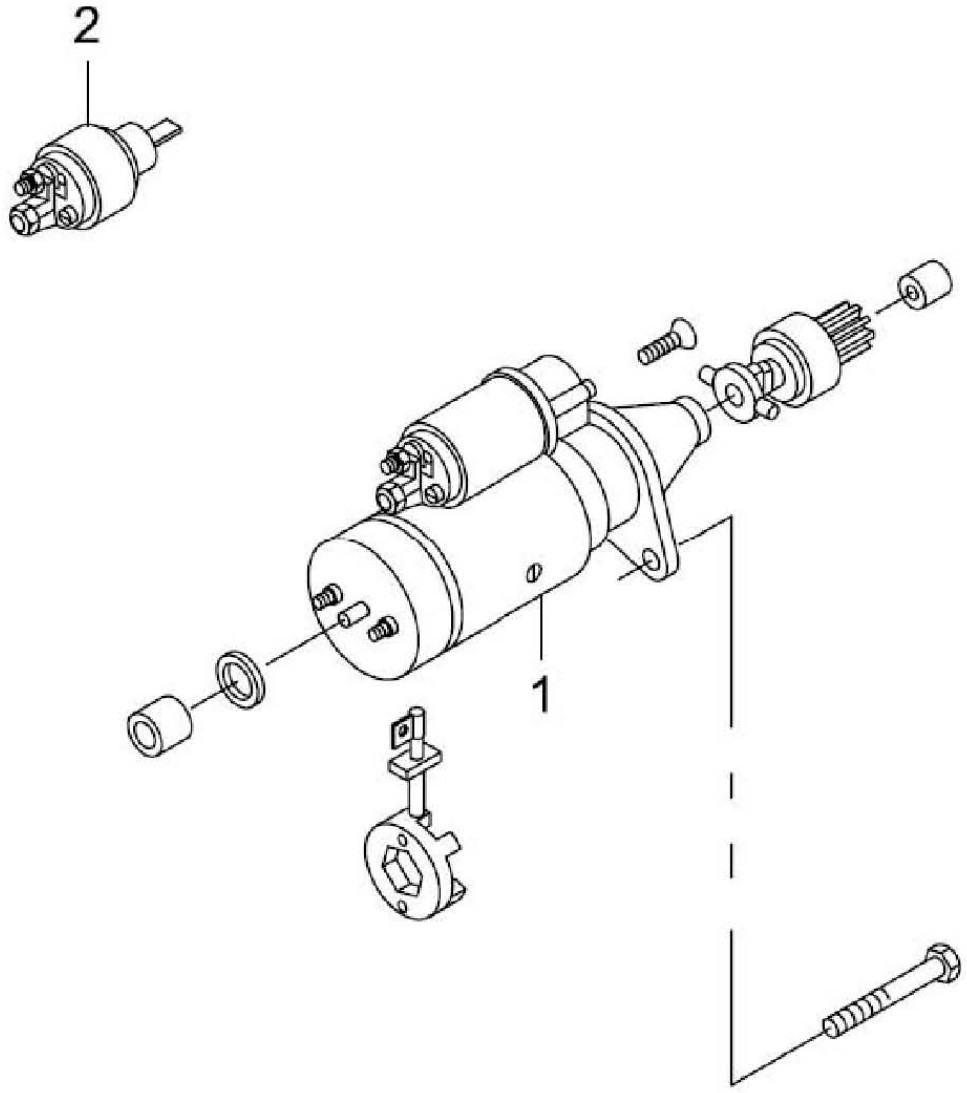

ENGINE ELECTRICAL - STARTER (156)

NO.	OPERATION DESCRIPTION	OPERATION CODE	CM		MU/KO		RX	
			2.0/ 2.3	2.8/ 3.2	2.0/ 2.3	2.8/ 3.2	2.0/ 2.3	2.8/ 3.2
1	MOTOR ASSEMBLY, STARTER DOHC - REPLACE	1560900	1.2	1.2	1.0	1.0	1.0	1.0
2	SWITCH, STARTER MOTOR MAGNETIC - REPLACE	1562700	1.5	1.5	1.2	1.2	1.2	1.2

LAUNCH

CM : CHAIRMAN, MU : MUSSO, KO : KORANDO, RX : REXTON

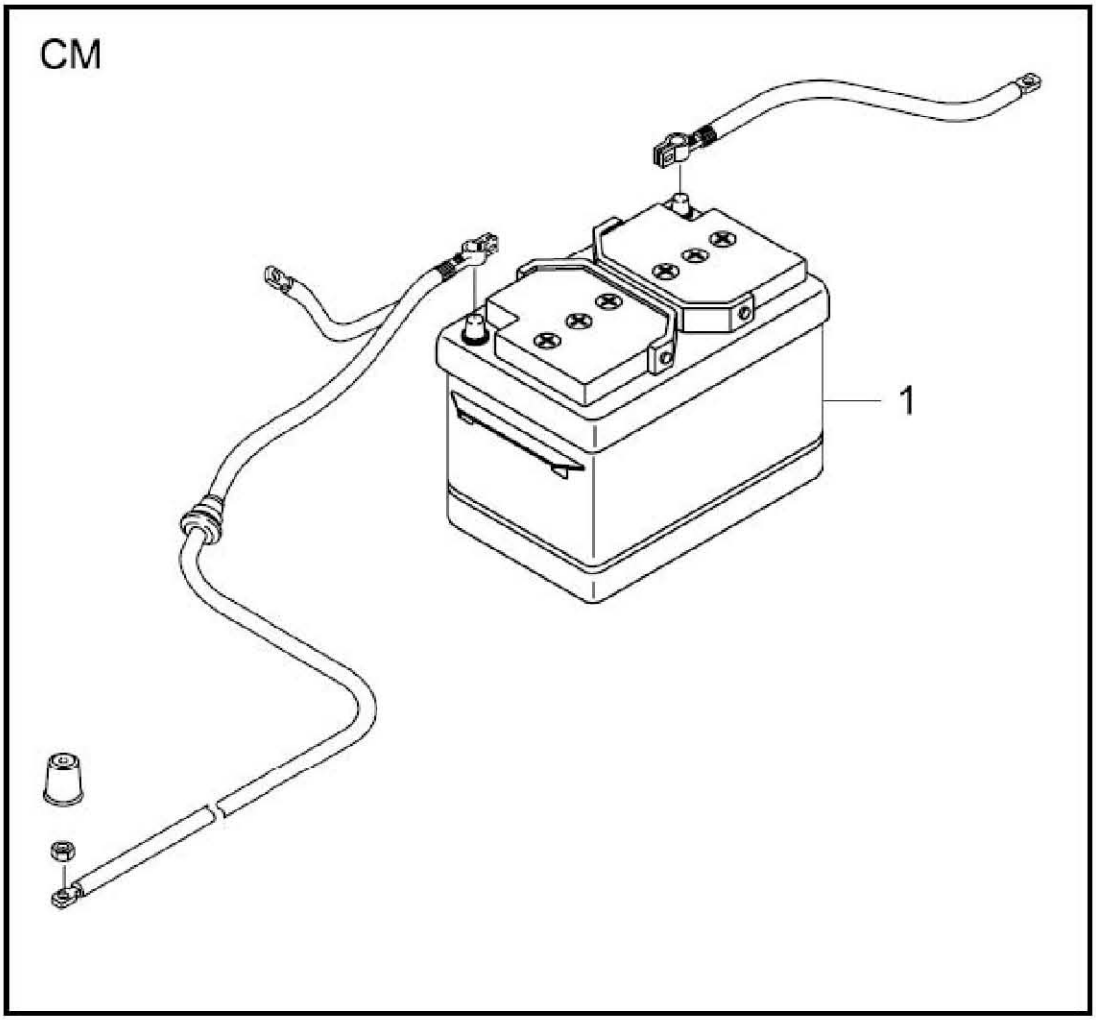

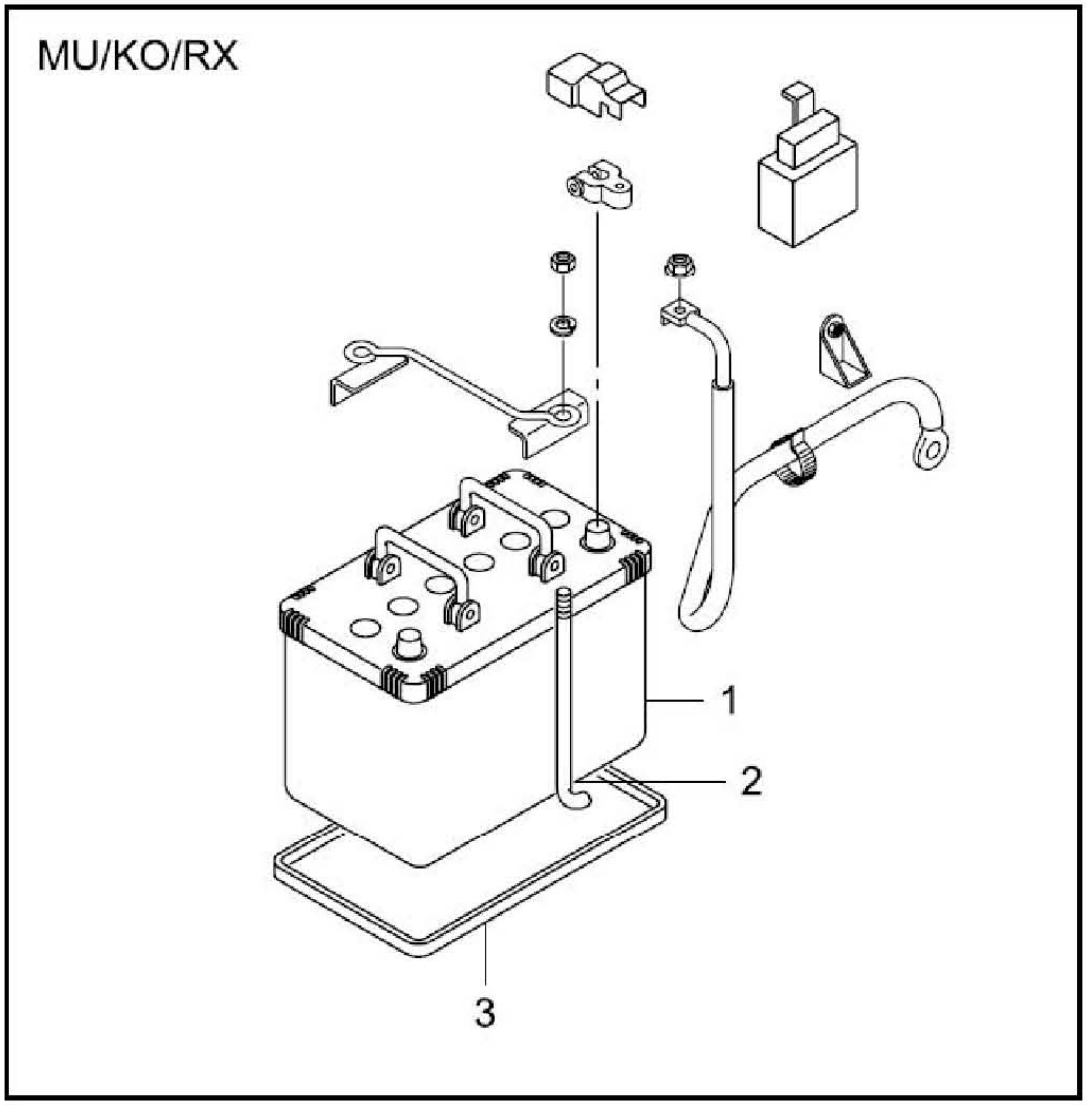

ENGINE ELECTRICAL - BATTERY (157)

NO.	OPERATION DESCRIPTION	OPERATION CODE	CM		MU/KO		RX	
			2.0/ 2.3	2.8/ 3.2	2.0/ 2.3	2.8/ 3.2	2.0/ 2.3	2.8/ 3.2
1	BATTERY - REPLACE	1570300	0.2	0.2	0.2	0.2	0.2	0.2
2	RETAINER AND/OR BOLTS, BATTERY - REPLACE	1570500	0.1	0.1	0.2	0.2	0.2	0.2
3	CARRIER, BATTERY - REPLACE	1571100	-	-	0.3	0.3	0.3	0.3

CM : CHAIRMAN, MU : MUSSO, KO : KORANDO, RX : REXTON

LAUNCH

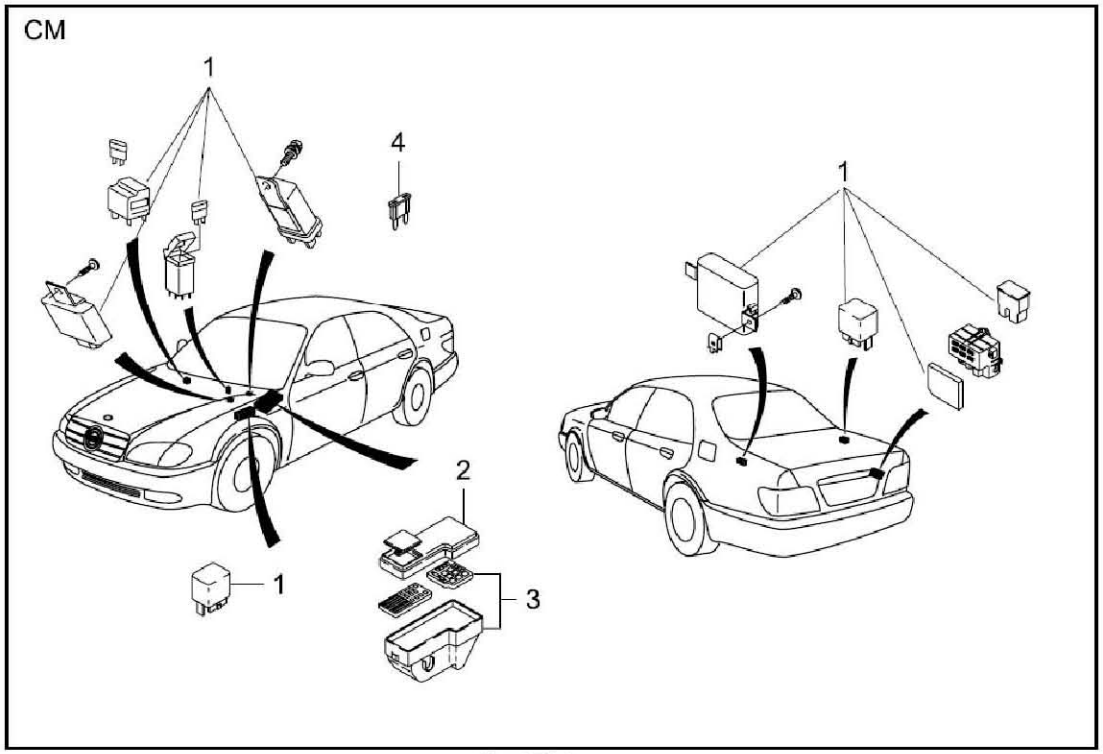

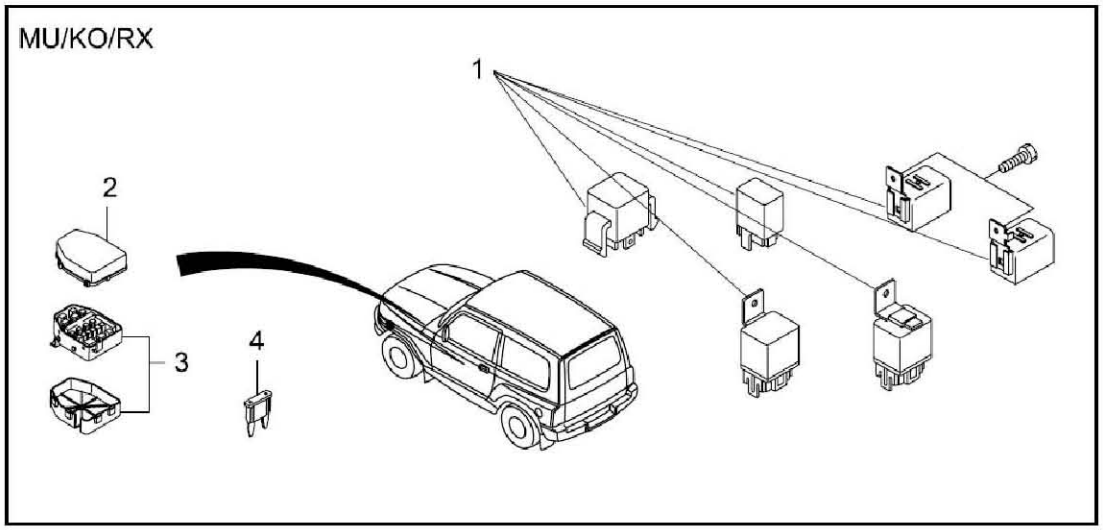

ENGINE ELECTRICAL - FUSE & RELAY (158)

NO.	OPERATION DESCRIPTION	OPERATION CODE	CM		MU/KO		RX	
			2.0/ 2.3	2.8/ 3.2	2.0/ 2.3	2.8/ 3.2	2.0/ 2.3	2.8/ 3.2
1	RELAY - REPLACE							
	Fog Lamp	1580200	0.2	0.2	0.2	0.2	0.2	0.2
	Enable (ABS)	1580500	0.2	0.2	0.2	0.2	0.2	0.2
	Window Wiper Motor	1580900	0.2	0.2	0.2	0.2	0.2	0.2
	Head Lamp	1581100	0.2	0.2	0.2	0.2	0.2	0.2
	Other Relays	1581500	0.2	0.2	0.2	0.2	0.2	0.2
	Turn Signal	1582100	0.2	0.2	0.2	0.2	0.2	0.2
2	COVER, FUSE BOX - REPLACE	1582300	0.2	0.2	0.2	0.2	0.2	0.2
3	BOX, RELAY & FUSE - REPLACE	1582700	0.7	0.7	0.6	0.6	0.6	0.6
4	FUSE - REPLACE	1583700	0.2	0.2	0.2	0.2	0.2	0.2

LAUNCH

CM : CHAIRMAN, MU : MUSSO, KO : KORANDO, RX : REXTON