1G - ENGINE INTAKE & EXHAUST

LAUNCH

LAUNCH

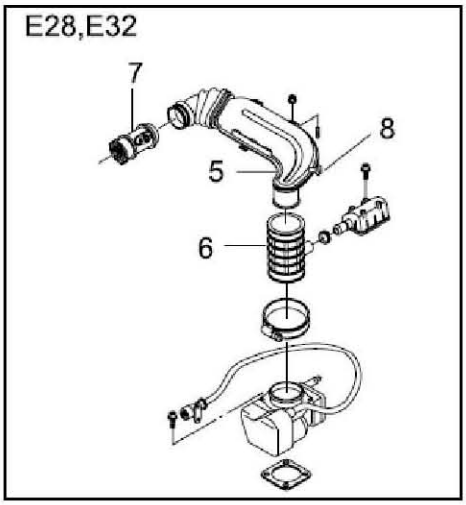
E28,E32
7
8
5
6

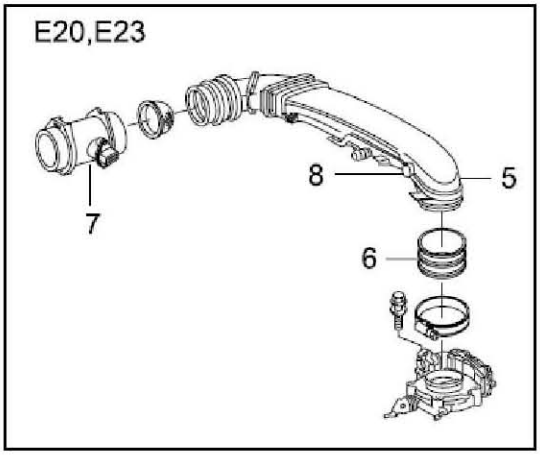
E20,E23
8
5
7
6

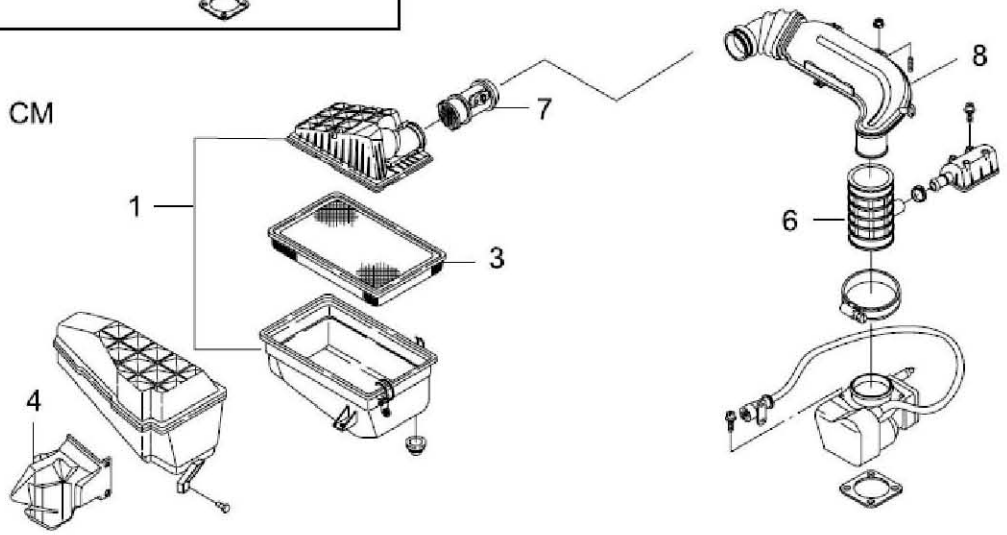
CM
7
8
1
3
6
4

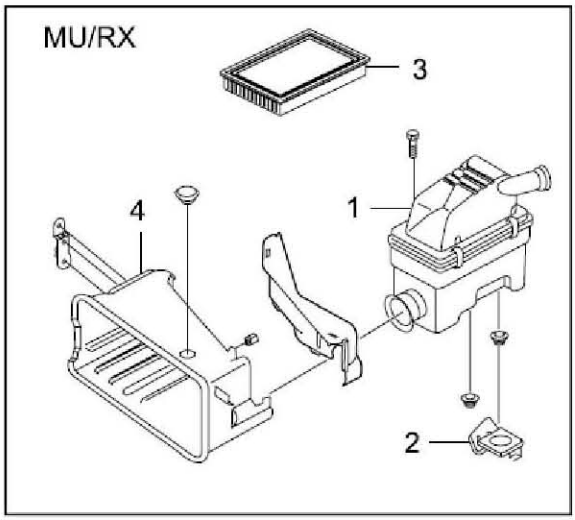
MU/RX
3
4
1
2

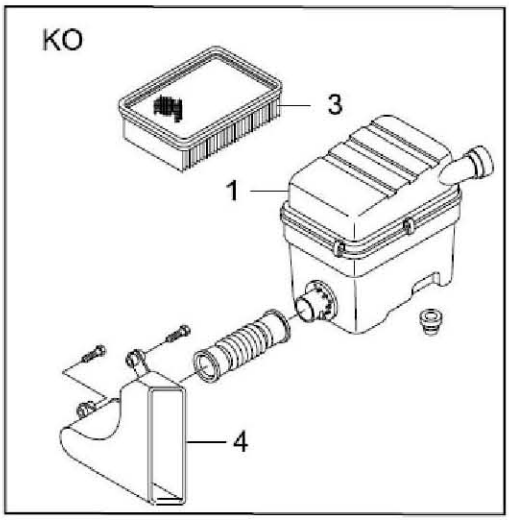
KO
3
1
4

ENGINE INTAKE & EXHAUST - AIR INTAKE SYSTEM (191)

NO.	OPERATION DESCRIPTION	OPERATION CODE	CM		MU/KO		RX	
			2.0/ 2.3	2.8/ 3.2	2.0/ 2.3	2.8/ 3.2	2.0/ 2.3	2.8/ 3.2
1	AIR CLEANER - REPLACE	1910300	0.6	0.6	0.5	0.5	0.5	0.5
2	BRACKET, AIR CLEANER HOUSING MOUNTING-REPLACE	1910350	-	-	0.7	0.7	0.7	0.7
3	FILTER, AIR CLEANER - REPLACE	1910500	0.4	0.4	0.2	0.2	0.2	0.2
4	DUCT AND/OR HOSE, OUTSIDE AIR - REPLACE	1910700	0.2	0.2	0.3	0.3	0.3	0.3
5	SENSOR, MAT - REPLACE	1910900	0.4	0.4	0.4	0.4	-	-
6	HOUSING, INLET AIR - REPLACE	1911310	0.7	0.7	-	-	0.5	0.5
7	METER, AIR MASS - REPLACE	1911320	0.2	0.2	0.2	0.2	0.2	0.2
8	DUCT INT AIR - REPLACE	1910800	0.3	0.3	0.3	0.3	0.3	0.3

LAUNCH
LAUNCH

CM : CHAIRMAN, MU : MUSSO, KO : KORANDO, RX : REXTON

E28,E32

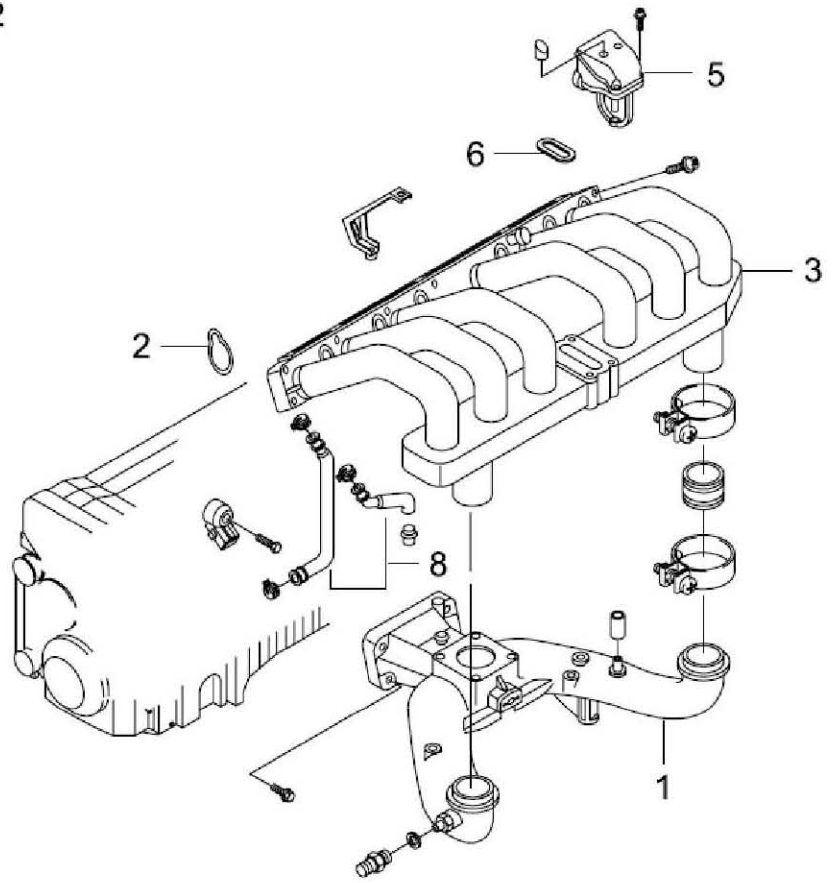

E20,E23

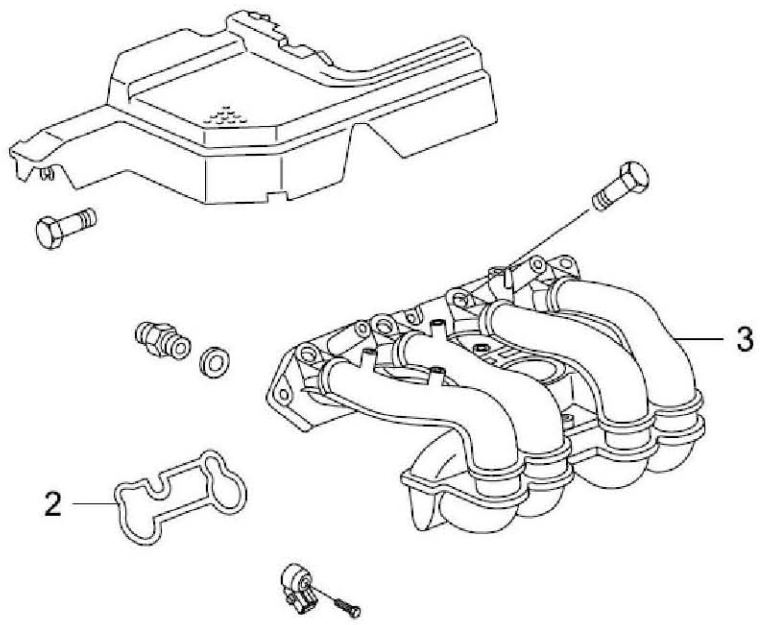

ENGINE INTAKE & EXHAUST - INTAKE MANIFOLD (193)

NO.	OPERATION DESCRIPTION	OPERATION CODE	CM		MU/KO		RX	
			2.0/ 2.3	2.8/ 3.2	2.0/ 2.3	2.8/ 3.2	2.0/ 2.3	2.8/ 3.2
1	MANIFOLD, INTAKE LOWER - REPLACE	1930220	2.1	2.1	1.3	1.3	1.3	1.3
2	GASKET, UPPER INTAKE MANIFOLD - REPLACE	1930210	-	-	0.7	0.7	0.7	0.7
3	MANIFOLD, INTAKE UPPER - REPLACE	1930230	1.5	1.5	2.3	2.3	2.3	2.3
4	SENSOR, HFM - REPLACE	1930350	-	-	-	-	-	-
	A - Replace each additional	1932120	-	-	-	-	-	-
5	FLAP, RESONANCE - REPLACE	1932200	-	1.6	-	1.6	-	1.6
6	PACKING - REPLACE	1932400	-	1.6	-	1.6	-	1.6

LAUNCH
LAUNCH

CM : CHAIRMAN, MU : MUSSO, KO : KORANDO, RX : REXTON

E28,E32

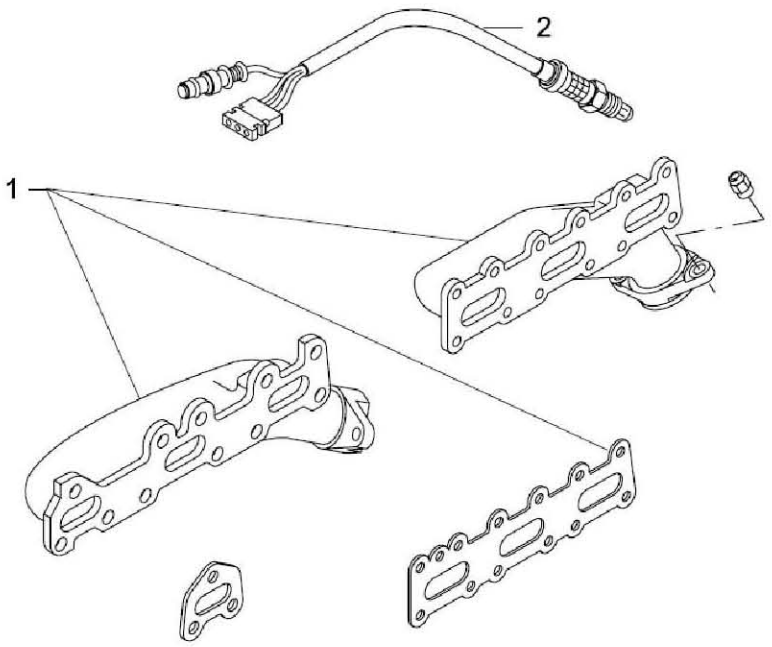

E20,E23

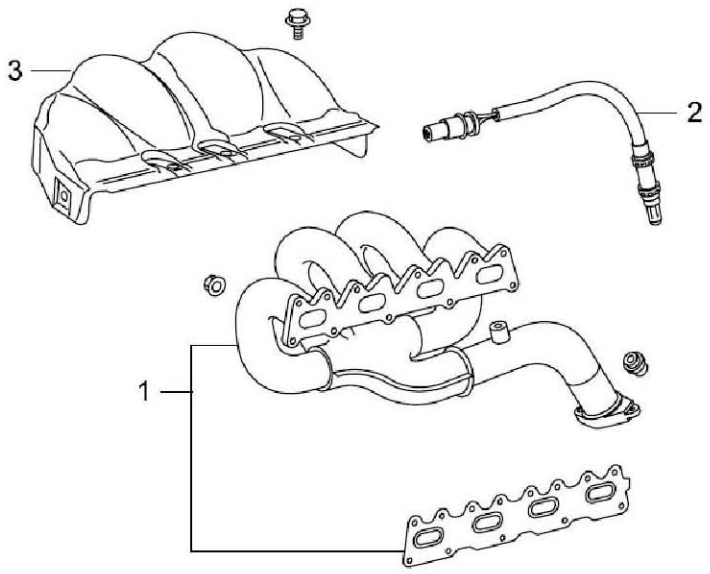

ENGINE INTAKE & EXHAUST - EXHAUST MANIFOLD (194)

NO.	OPERATION DESCRIPTION	OPERATION CODE	CM		MU/KO		RX	
			2.0/ 2.3	2.8/ 3.2	2.0/ 2.3	2.8/ 3.2	2.0/ 2.3	2.8/ 3.2
1	MANIFOLD AND/OR GASKET EXHAUST DOHC-REPLACE	1940300	0.8	0.8	0.8	0.8	0.8	0.8
2	SENSOR, OXYGEN DOHC - REPLACE	1940600	0.2	0.2	0.2	0.2	0.2	0.2
3	COVER, EXHAUST MANIFOLD UPPER - REPLACE	1940810	0.8	-	0.8	-	0.5	0.6
4	COVER, EXHAUST MANIFOLD LOWER - REPLACE	1940830	1.4	-	1.4	-	0.4	0.4

LAUNCH

CM : CHAIRMAN, MU : MUSSO, KO : KORANDO, RX : REXTON

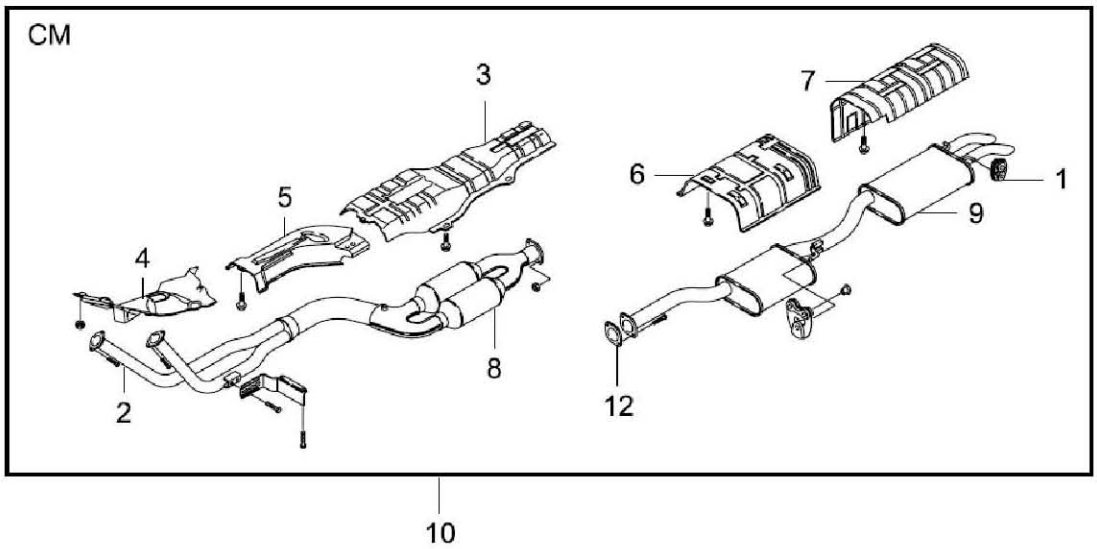
CM
3
7
6
1
5
9
4
8
2
12
10

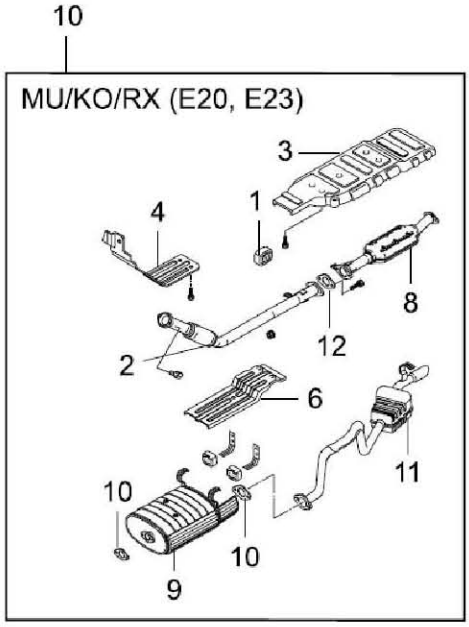
10
MU/KO/RX (E20, E23)
3
1
4
8
12
2
6
11
10
10
9

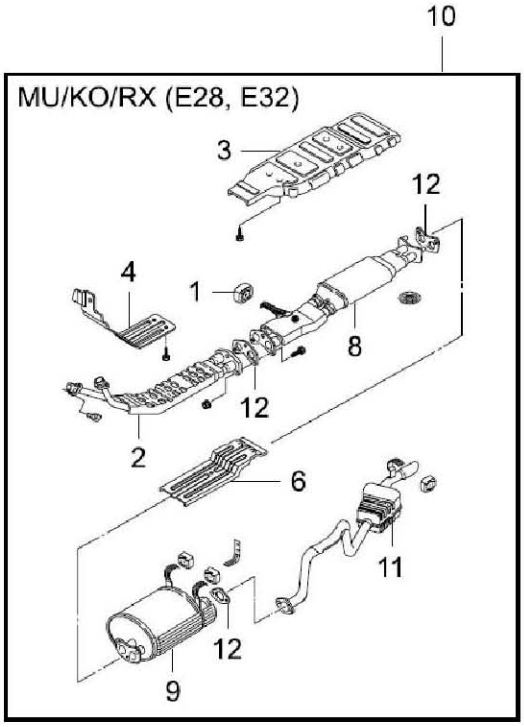
10
MU/KO/RX (E28, E32)
3
12
4
1
8
12
2
6
11
12
9

ENGINE INTAKE & EXHAUST - EXHAUST PIPE LINE (196)

NO.	OPERATION DESCRIPTION	OPERATION CODE	CM		MU/KO		RX	
			2.0/ 2.3	2.8/ 3.2	2.0/ 2.3	2.8/ 3.2	2.0/ 2.3	2.8/ 3.2
1	HANGER AND/OR CLAMP, EXHAUST SYSTEM-REPLACE	1960300	0.2	0.2	0.2	0.2	0.2	0.2
2	PIPE, FRONT EXHAUST - REPLACE	1960900	0.6	0.6	0.6	0.6	0.6	0.6
3	SHIELD, CONVERTER - REPLACE	1961300	0.5	0.5	0.5	0.5	0.5	0.5
4	HEAT SHIELD, FRONT - REPLACE	1961400	0.5	0.5	0.5	0.5	0.5	0.5
5	HEAT SHIELD, CENTER - REPLACE	1961410	0.5	0.5	-	-	-	-
6	HEAT SHIELD, CENTER MUFFLER - REPLACE	1961420	0.5	0.5	0.5	0.5	0.5	0.5
7	HEAT SHIELD, REAR - REPLACE	1961430	0.5	0.5	-	-	-	-
8	CONVERTER - REPLACE	1961500	0.6	0.6	0.6	0.6	0.6	0.6
9	MUFFLER - REPLACE	1962100	0.5	0.5	0.5	0.5	0.5	0.5
10	EXHAUST SYSTEM (COMPLETE) - REPLACE	1962500	1.5	1.5	1.5	1.5	1.5	1.5
11	PIPE, TAIL - REPLACE	1962600	-	-	0.5	0.5	0.5	0.5
12	GASKET each	1962700	0.2	0.2	0.2	0.2	0.2	0.2

LAUNCH

CM : CHAIRMAN, MU : MUSSO, KO : KORANDO, RX : REXTON