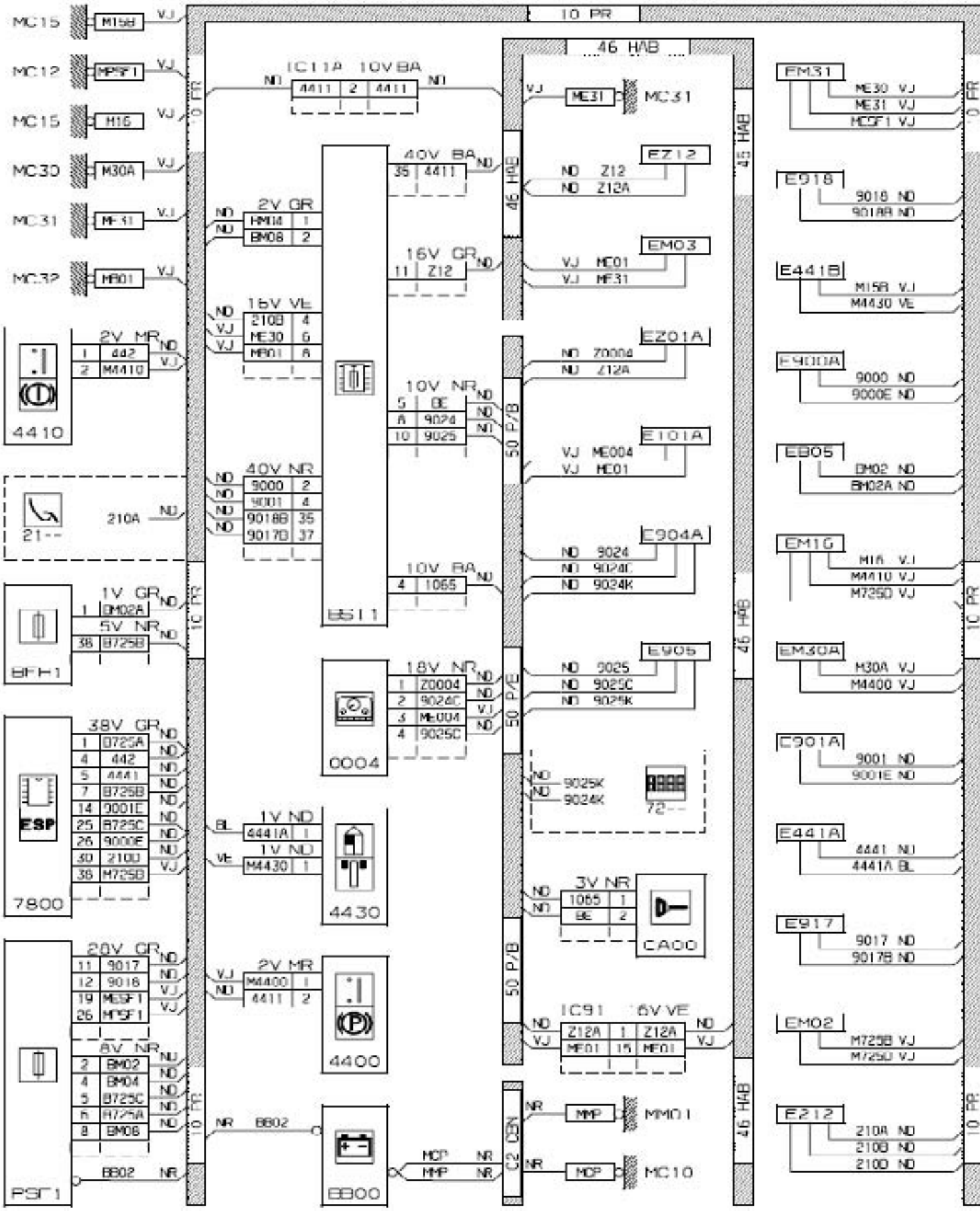
10 PR
46 HAB
MC15
MC12
MC15
MC30
MC31
MC32
IC11A 10V BA
40V BA
2V GR
16V GR
16V VE
2V MR
10V NR
40V NR
10V BA
1V GR
5V NR
18V NR
38V GR
1V ND
3V NR
28V GR
2V MR
8V NR
IC91 6V VE
4410
21--
BFH1
7800
PSF1
BS11
0004
4430
4400
BB00
CA00
72--
50 P/B
C2 CEN
MC31
EZ12
EM03
EZ01A
E101A
E904A
E905
MMO1
MC10
EM31
E918
E441B
F9000A
EB05
EM16
EM30A
C901A
E441A
E917
EM02
E212

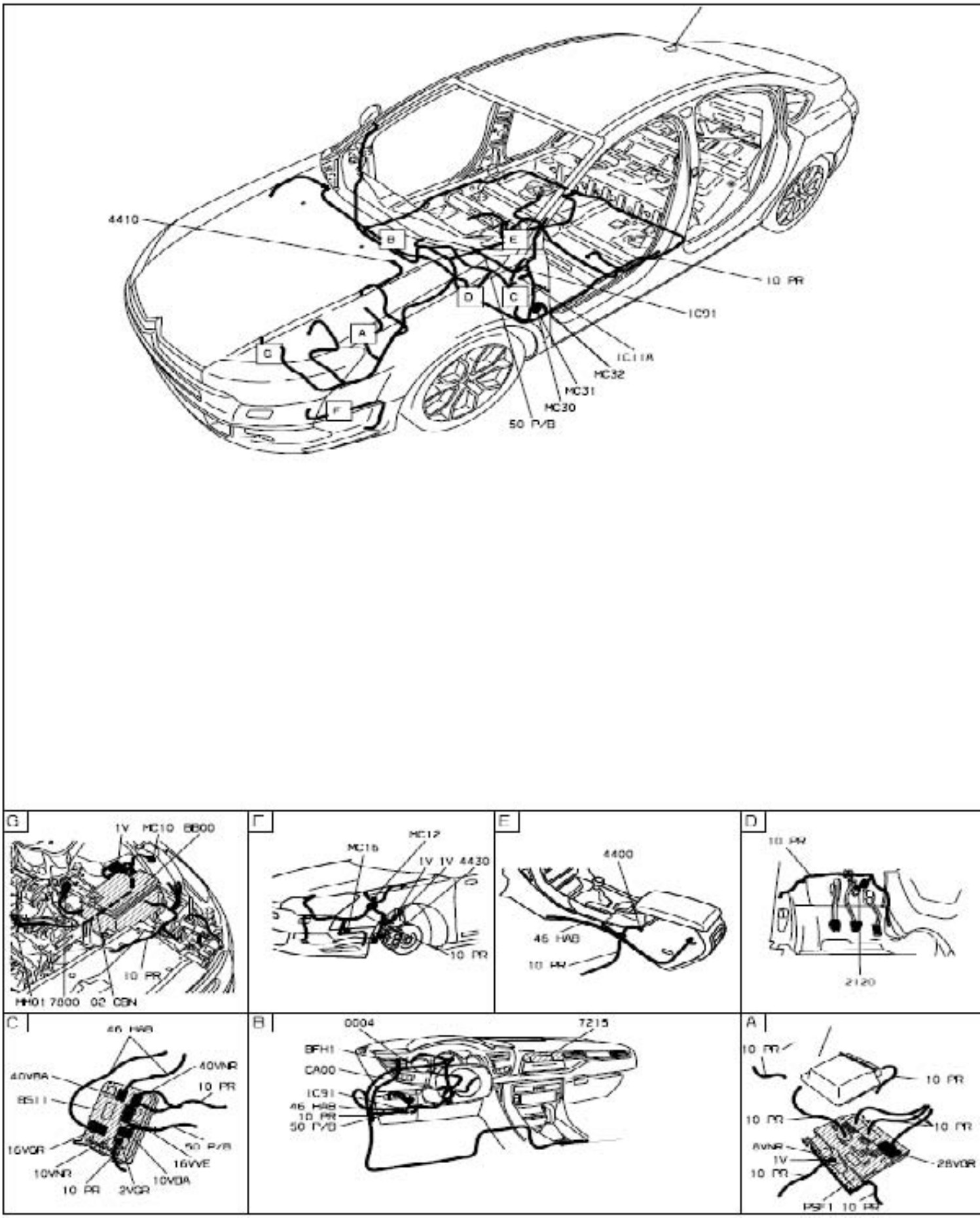
4410
B
E
D
C
A
G
F
10 PR
IC91
IC11A
MC32
MC31
MC30
50 P/B
1V MC10 8800
10 PR
MH01 7800 02 CBN
MC12
MC16
1V 1V 4430
10 PR
4400
46 HAB
10 PR
10 PR
2120
46 HAB
40VRA
40VNR
10 PR
BS11
16VGR
50 P/B
16VVE
10VNR
10VBA
10 PR
2VGR
0004
7215
BFH1
CA00
IC91
46 HAB
10 PR
50 P/B
10 PR
10 PR
10 PR
10 PR
8VNR
1V
10 PR
28VGR
PSF1 10 PR

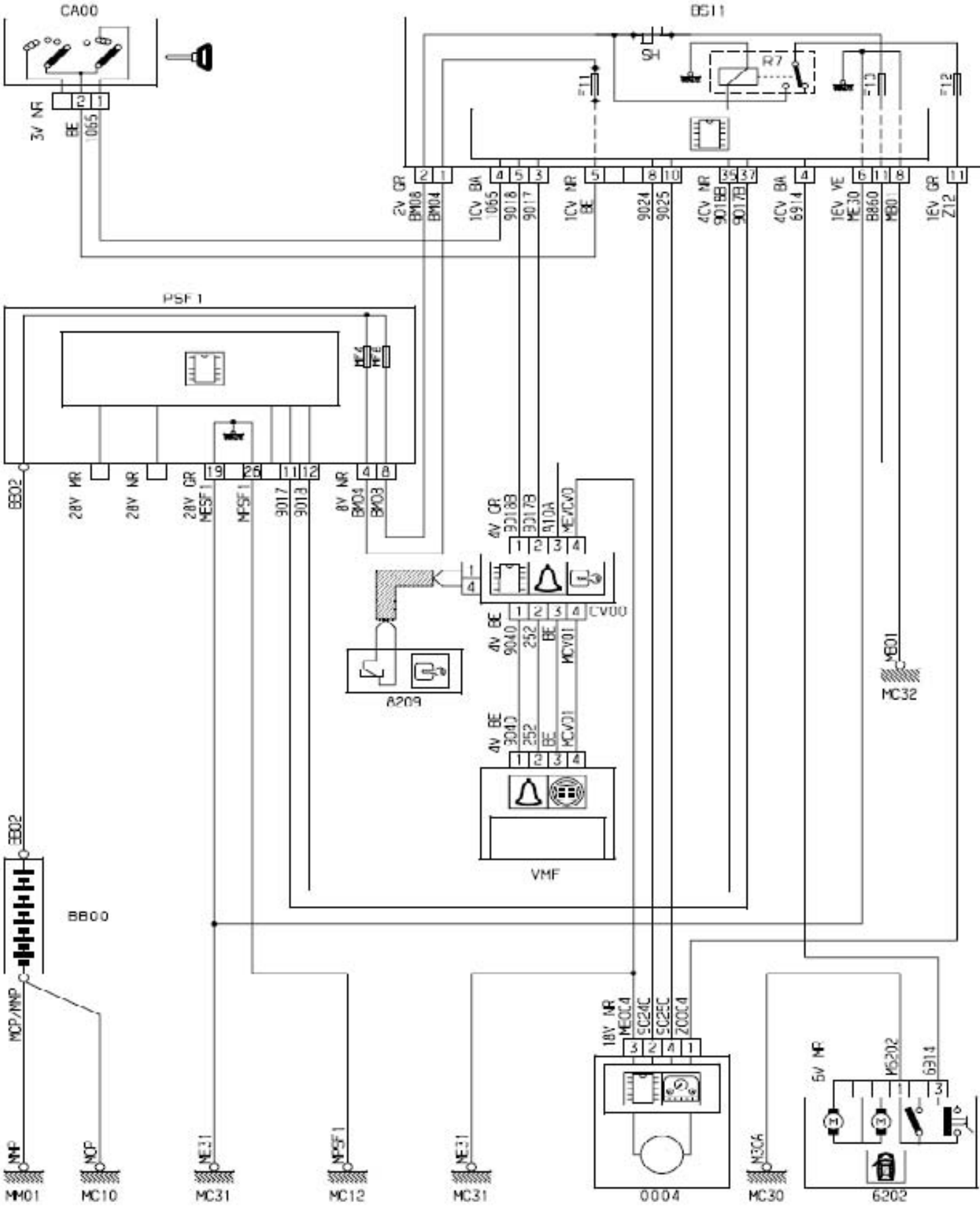
CA00
BS11
SH
R7
F11
F12
F12
3V NR
BE
1065
2V GR
BM08
BM04
1CV BA
1065
9018
9017
1CV NR
BE
9024
9025
4CV NR
9018B
9017B
4CV BA
6914
1EV VE
ME30
B860
MB01
1EV GR
Z12
PSF1
ME4
ME5
BB02
28V NR
28V NR
28V GR
MESF1
MPSF1
9017
9013
8V NR
BM04
BM03
4V GR
9218B
9217B
910A
MEVCV0
CVU0
4V BE
9040
252
BE
MCV01
A209
MB01
MC32
VMF
BB00
MCP/MNP
18V NR
MEOC4
SC24C
SC25C
ZOOC4
5V NR
MS202
6314
MNP
MCP
ME31
MPSF1
ME31
MC30
MM01
MC10
MC31
MC12
MC31
0004
MC30
6202

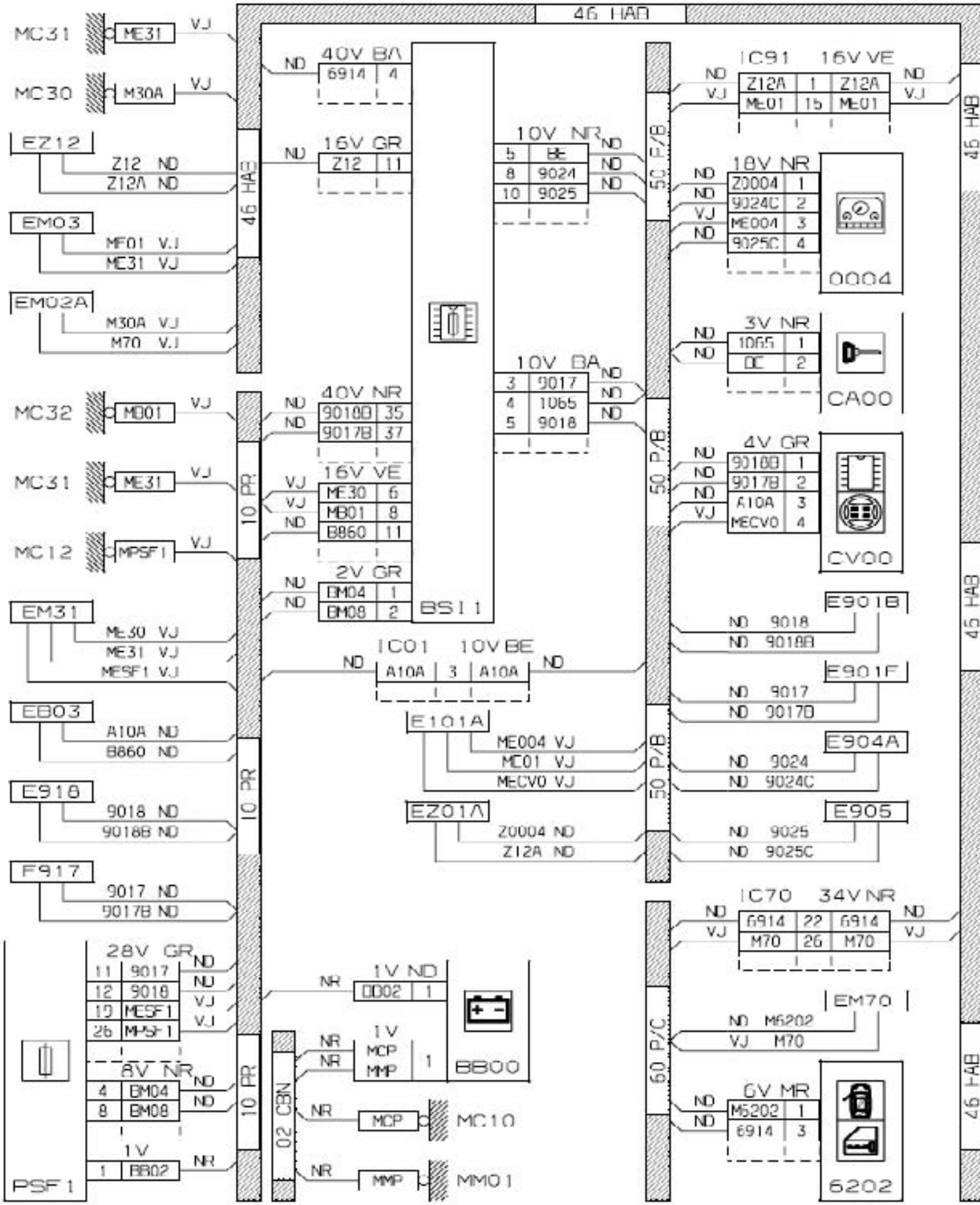
46 HAB
MC31
ME31
VJ
MC30
M30A
EZ12
Z12 ND
Z12A ND
EM03
MF01 VJ
MC31 VJ
EM02A
M30A VJ
M70 VJ
MC32
M001
MC31
ME31
MC12
MPSF1
EM31
ME30 VJ
ME31 VJ
MESF1 VJ
EB03
A10A ND
B860 ND
E918
9018 ND
9018B ND
F917
9017 ND
9017B ND
PSF1
28V GR
11 9017
12 9018
19 MESF1
26 MPSF1
8V NR
4 BM04
8 BM08
1V
1 BB02
10 PR
46 HAB
40V BA
6914 4
16V GR
Z12 11
40V NR
9018B 35
9017B 37
16V VE
ME30 6
MB01 8
B860 11
2V GR
BM04 1
BM08 2
BSI 1
ICO1 10V BE
A10A 3 A10A
E101A
ME004 VJ
MC01 VJ
MECV0 VJ
EZ01A
Z0004 ND
Z12A ND
1V ND
DD02 1
1V
MCP
MMP
1
BB00
MC10
MMO1
02 CBN
10V NR
5 BE
8 9024
10 9025
10V BA
3 9017
4 1065
5 9018
50 P/B
IC91 16V VE
Z12A 1 Z12A
ME01 15 ME01
18V NR
Z0004 1
9024C 2
ME004 3
9025C 4
0004
3V NR
1065 1
DC 2
CA00
4V GR
9018B 1
9017B 2
A10A 3
MECV0 4
CV00
E901B
9018
9018B
E901F
9017
9017B
E904A
9024
9024C
E905
9025
9025C
IC70 34V NR
6914 22 6914
M70 26 M70
EM70
M6202
M70
60 P/C
6V MR
M6202 1
6914 3
6202

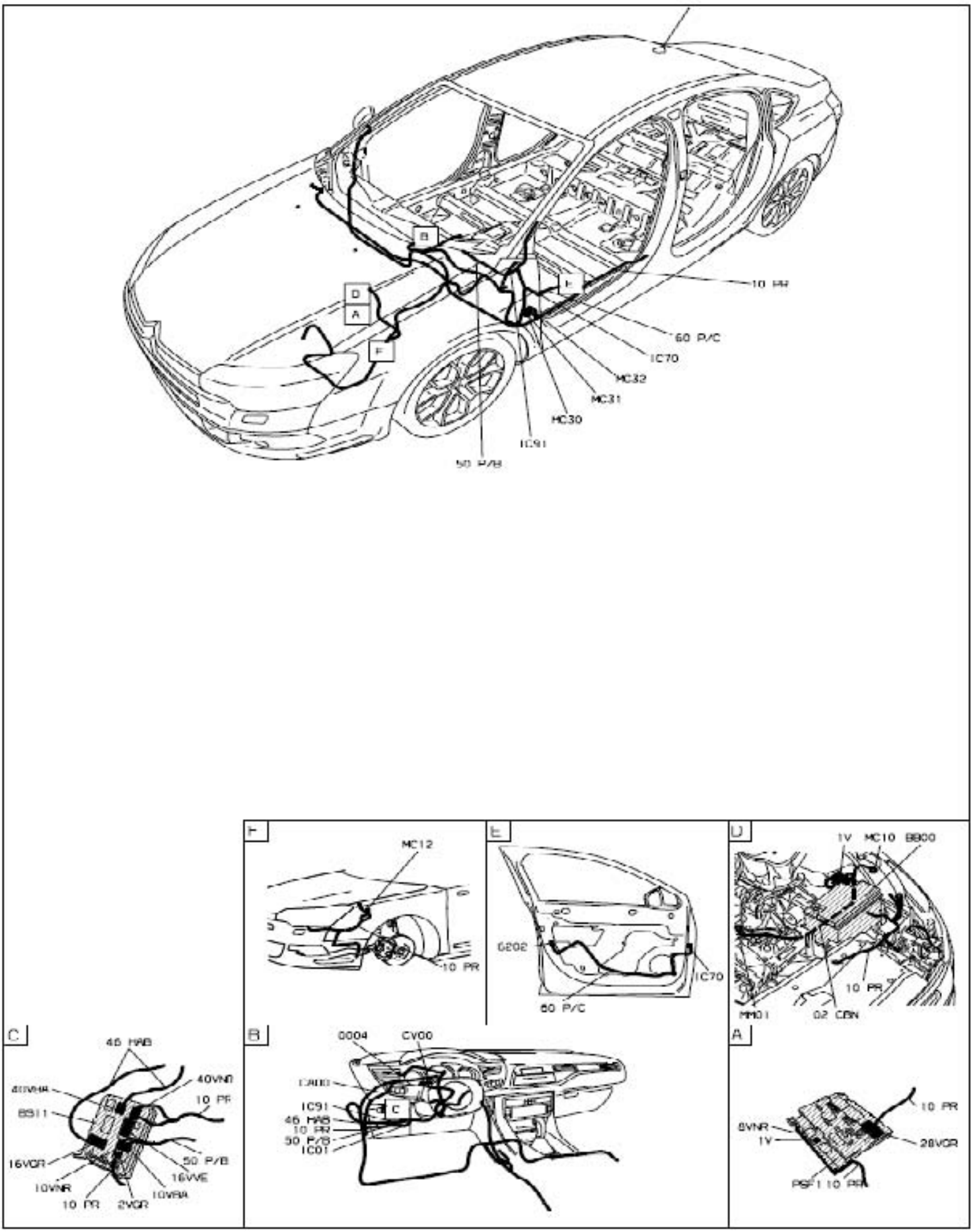
B
D
A
F
E
10 PR
60 P/C
IC70
MC32
MC31
MC30
IC91
50 P/B
F
MC12
10 PR
E
0202
IC70
60 P/C
D
1V MC10 BB00
10 PR
MM01
02 CBN
C
46 HAB
40VNB
40VNR
10 PR
BS11
50 P/B
16VGR
16VVE
10VNR
10VBA
10 PR
2VGR
B
0004
CV00
CA00
IC91
46 HAB
10 PR
50 P/B
IC01
C
A
10 PR
8VNR
1V
28VGR
PSF1
10 PR

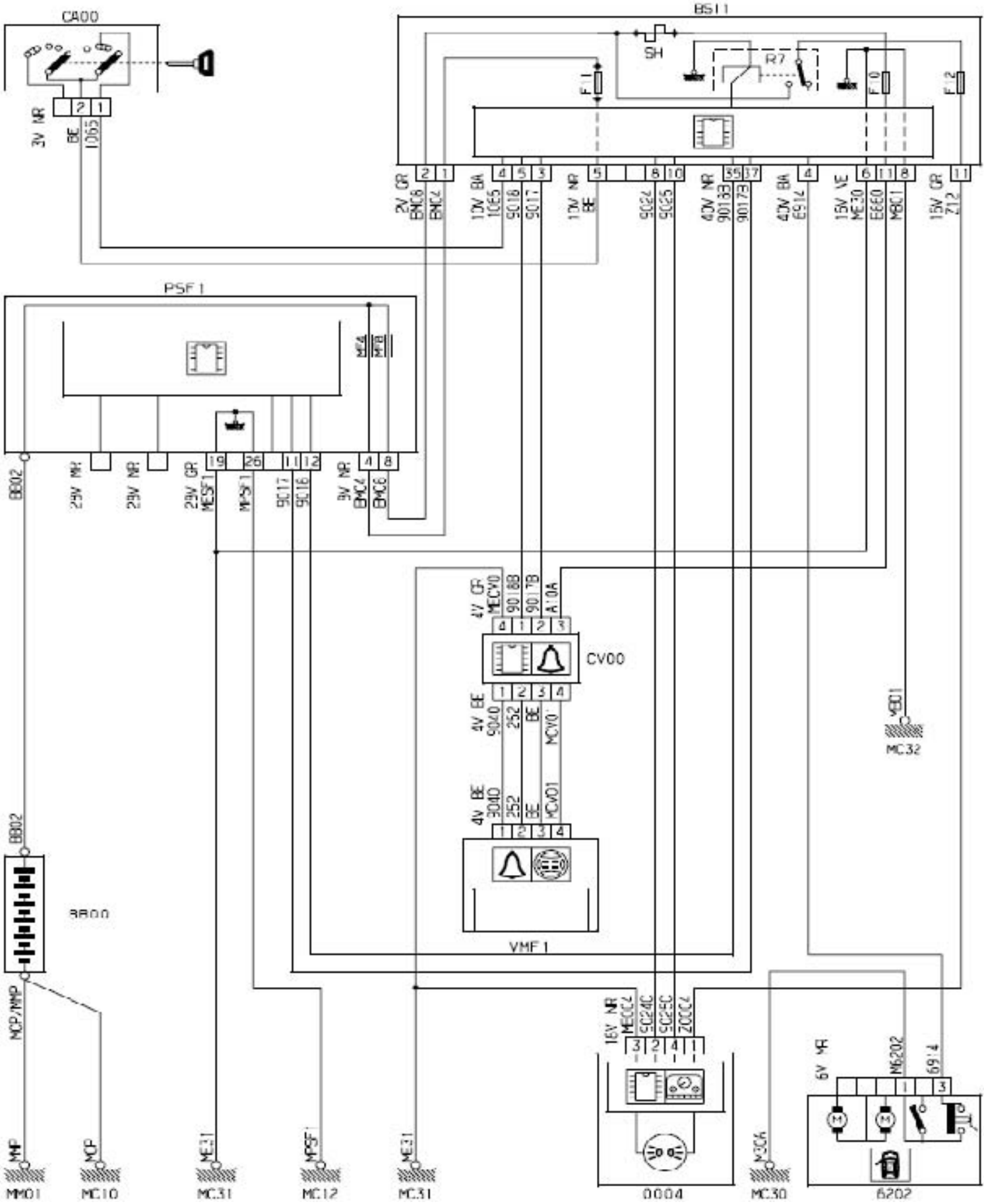
CA00
BS11
SH
R7
F1
F10
F12
PSF1
CV00
VMF1
BB02
BB00
MP01
MC10
MC31
MC12
MC31
0004
MC30
6202
MC32

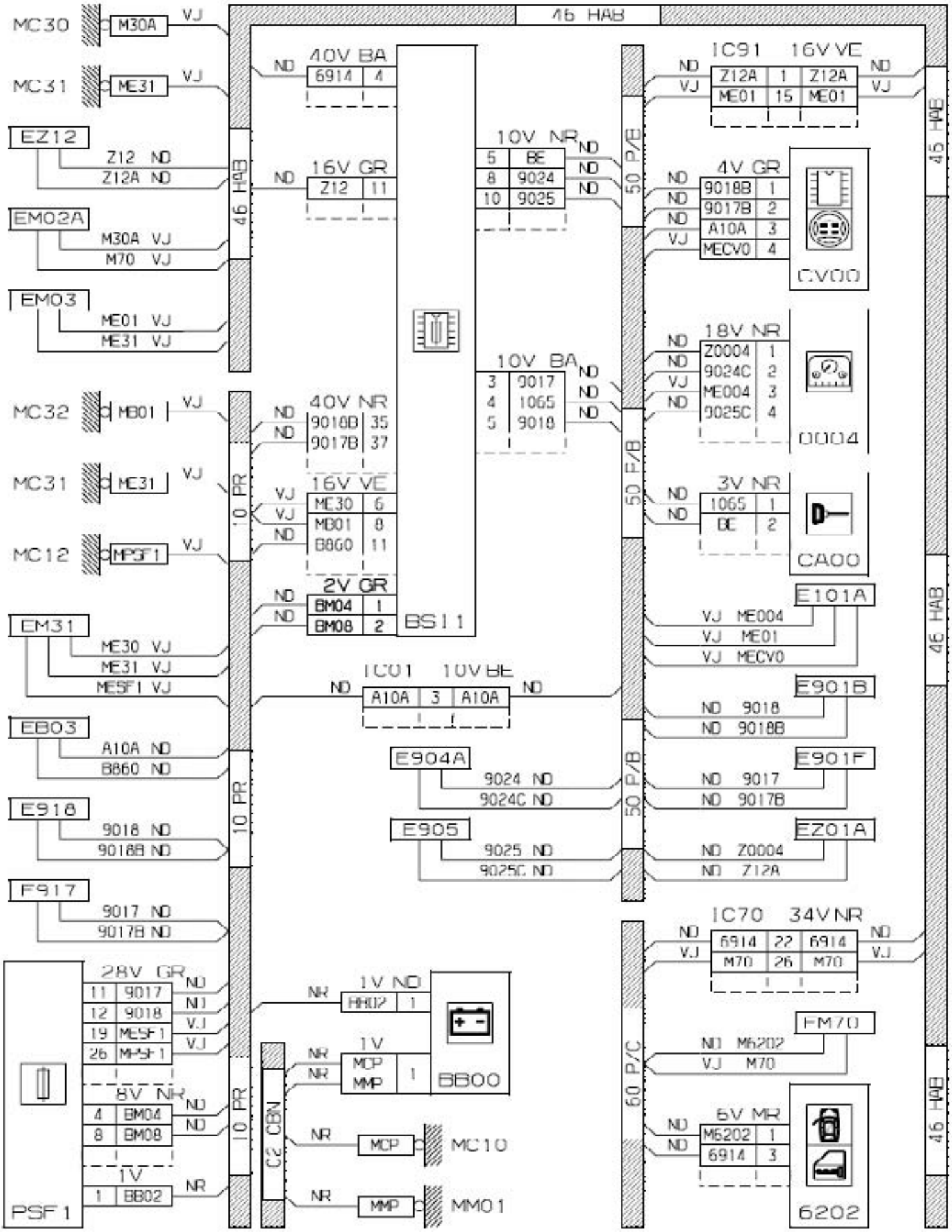
MC30
M30A
VJ
MC31
ME31
VJ
EZ12
Z12 ND
Z12A ND
EM02A
M30A VJ
M70 VJ
EM03
ME01 VJ
ME31 VJ
MC32
MB01
VJ
MC31
ME31
VJ
MC12
MPSF1
VJ
EM31
ME30 VJ
ME31 VJ
MESF1 VJ
EB03
A10A ND
B860 ND
E918
9018 ND
9018B ND
F917
9017 ND
9017B ND
PSF1
28V GR
11 9017 ND
12 9018 ND
19 MESF1 VJ
26 MPSF1 VJ
8V NR
4 BM04 ND
8 BM08 ND
1V
1 BB02 NR
46 HAB
10 PR
40V BA
ND 6914 4
16V GR
ND Z12 11
40V NR
ND 9018B 35
ND 9017B 37
16V VE
VJ ME30 6
VJ MB01 8
ND B860 11
2V GR
ND BM04 1
ND BM08 2
BS11
1V NR
NR HM02 1
1V
NR MCP
NR MMP 1
BB00
C2 CBN
NR MCP
MC10
NR MMP
MM01
10V NR
5 BE ND
8 9024 ND
10 9025 ND
10V BA
3 9017 ND
4 1065 ND
5 9018 ND
IC01 10V BE
ND A10A 3 A10A ND
E904A
9024 ND
9024C ND
E905
9025 ND
9025C ND
50 P/B
IC91 16V VE
ND Z12A 1 Z12A ND
VJ ME01 15 ME01 VJ
4V GR
ND 9018B 1
ND 9017B 2
ND A10A 3
VJ MECV0 4
CV00
18V NR
ND Z0004 1
ND 9024C 2
VJ ME004 3
ND 9025C 4
0004
3V NR
ND 1065 1
ND BE 2
CA00
E101A
VJ ME004
VJ ME01
VJ MECV0
E901B
ND 9018
ND 9018B
E901F
ND 9017
ND 9017B
EZ01A
ND Z0004
ND Z12A
IC70 34V NR
ND 6914 22 6914 ND
VJ M70 26 M70 VJ
FM70
ND M6202
VJ M70
60 P/C
6V MR
ND M6202 1
ND 6914 3
6202

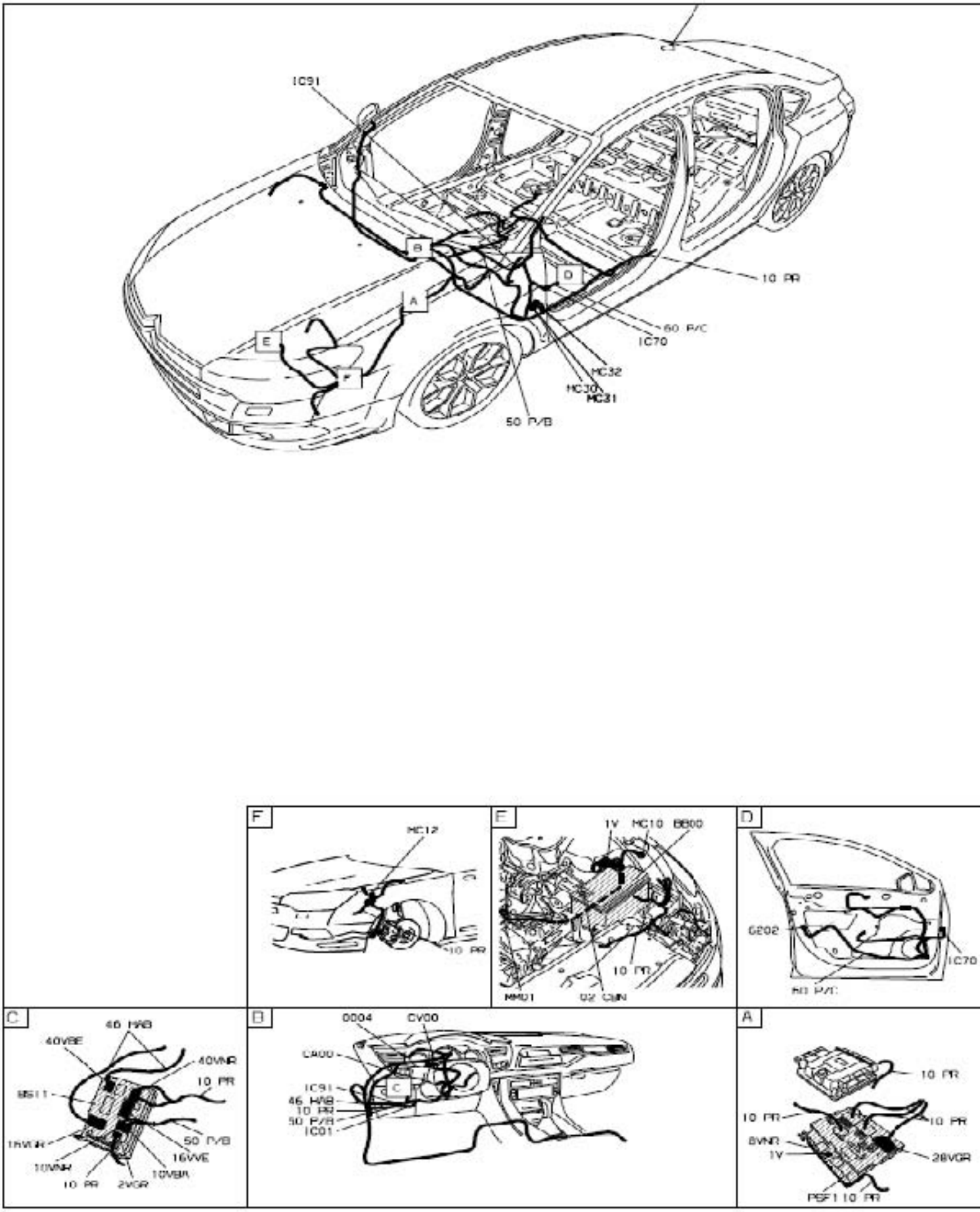
IC91
B
D
A
E
F
10 PR
60 P/C
IC70
MC32
MC30
MC31
50 P/B
F
MC12
10 PR
F
1V MC10 BB00
10 PR
MM01
02 GIN
D
G202
IC70
60 P/C
C
46 HWB
40VBE
40VNR
10 PR
BS11
18VGR
50 P/B
16VVE
10VNR
10VBR
10 PR
2VGR
B
0004
CV00
CA00
IC91
C
46 HWB
10 PR
50 P/B
IC01
A
10 PR
10 PR
10 PR
8VNR
1V
28VGR
PSF1 10 PR

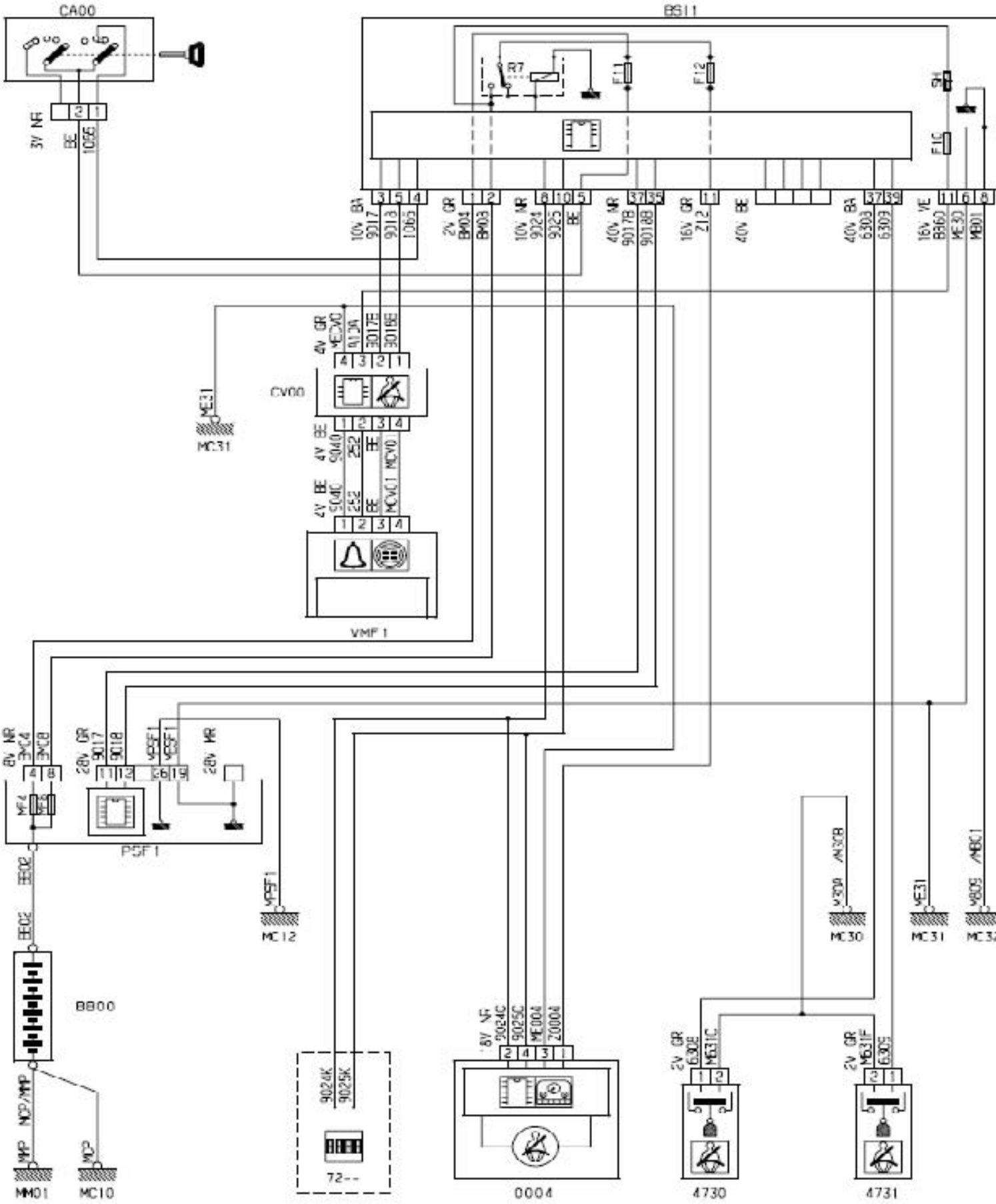
CA00
BS11
R7
F11
F12
F1C
CV00
VMF1
PSF1
MC31
MC12
MC30
BB00
MM01
MC10
72--
0004
4730
4731

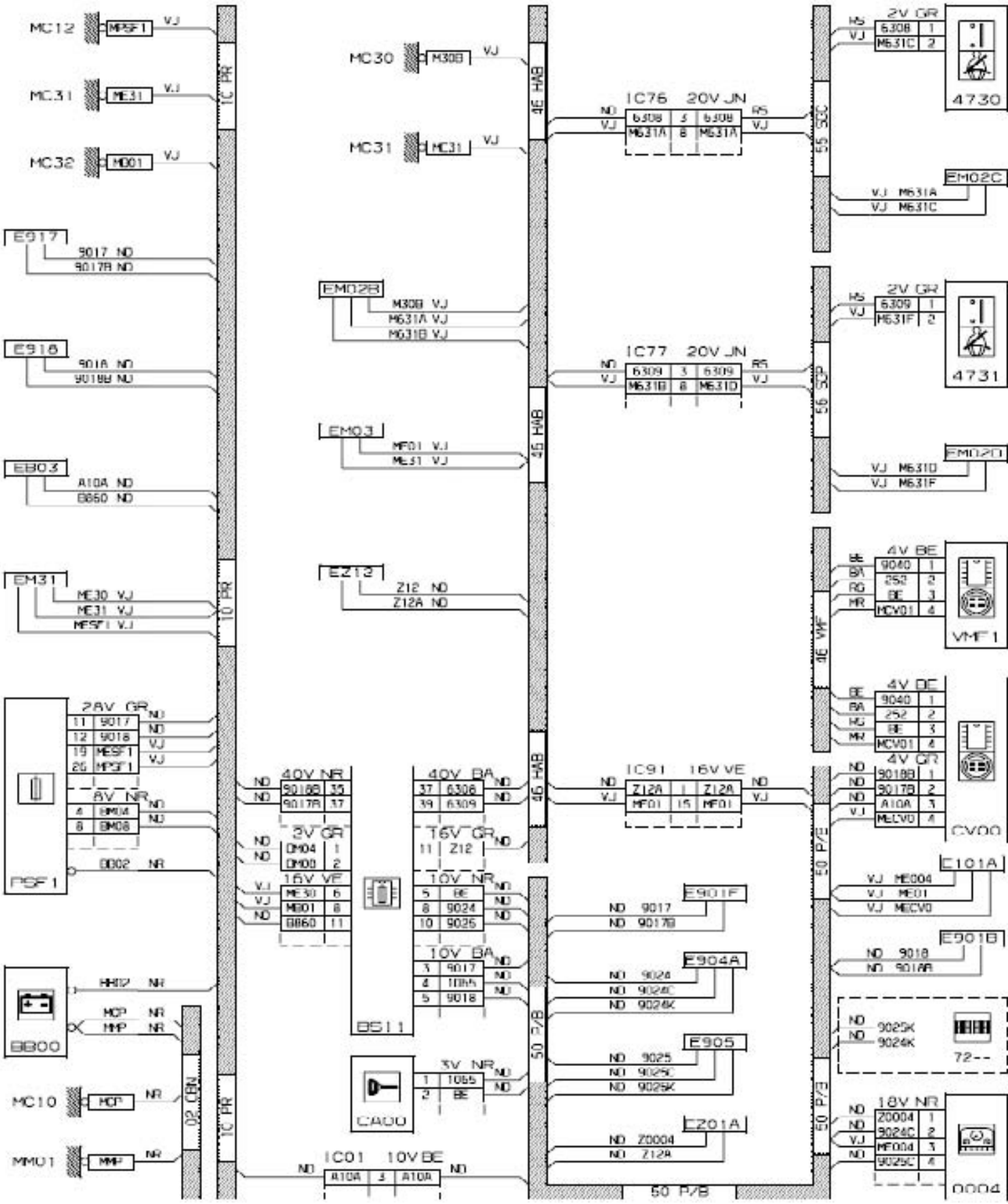
MC12
MC31
MC32
E917
E918
EB03
EM31
PSF1
BB00
MC10
MM01
MC30
EM02B
EM03
EZ12
BS11
CA00
IC01 10V BE
IC76 20V JN
IC77 20V JN
IC91 16V VE
E901F
E904A
E905
EZ01A
4730
4731
EM02C
EM02D
VMF1
CV00
E101A
E901B
72--
0004
50 P/B

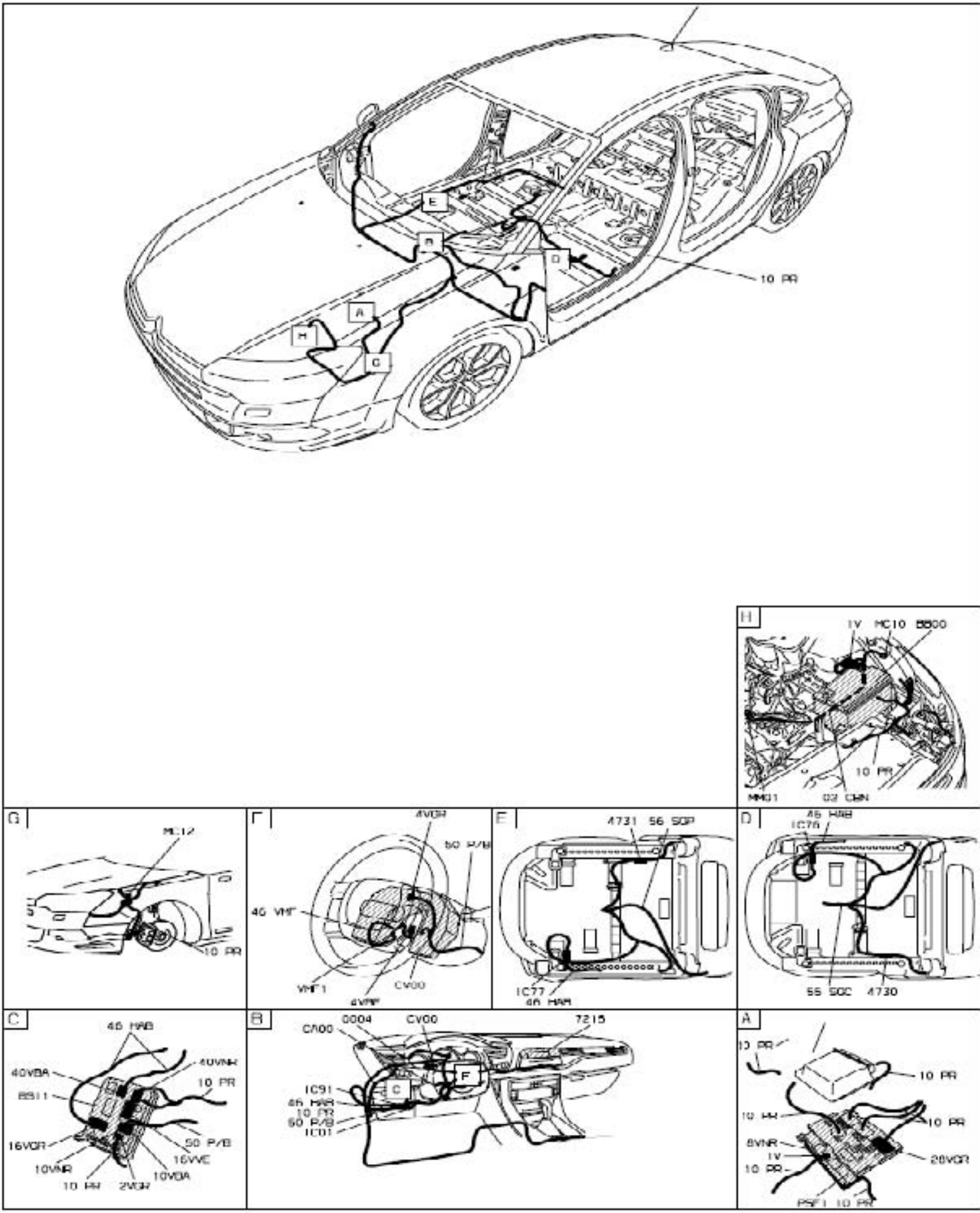
E
B
D
A
H
G
10 PR
H
1V MC10 BB00
10 PR
MM01 02 GRN
G
MC12
10 PR
F
4VGR
50 P/B
46 VNF
VNF1
CV00
4VNF
E
4731 56 SGP
IC77
46 HAR
D
46 HAB
IC76
55 SGC 4730
C
46 HAB
40VBA
40VNR
10 PR
BS11
16VGR
50 P/B
16VVE
10VNR
10VBA
10 RN 2VGR
B
0004 CV00
C/00
7215
F
C
IC91
46 HAR
10 PR
50 P/B
IC01
A
10 PR
10 PR
10 RN
10 PR
8VNR
1V
10 PR
20VGR
PSF1 10 PR

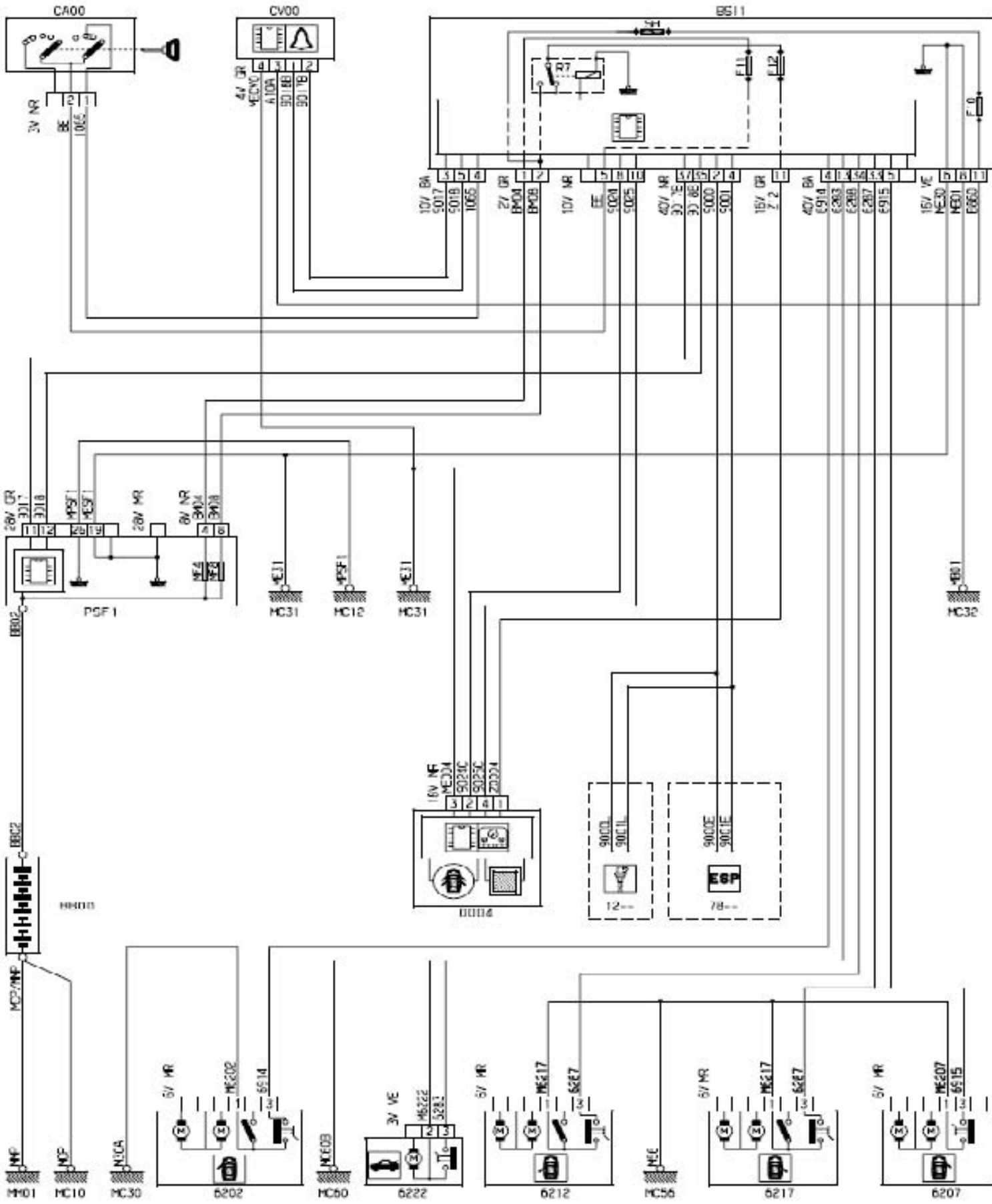
CA00
CV00
BS11
PSF1
MC31
MC12
MC32
MC01
MC10
MC30
MC60
MC56
6202
6222
6212
6217
6207
ESP

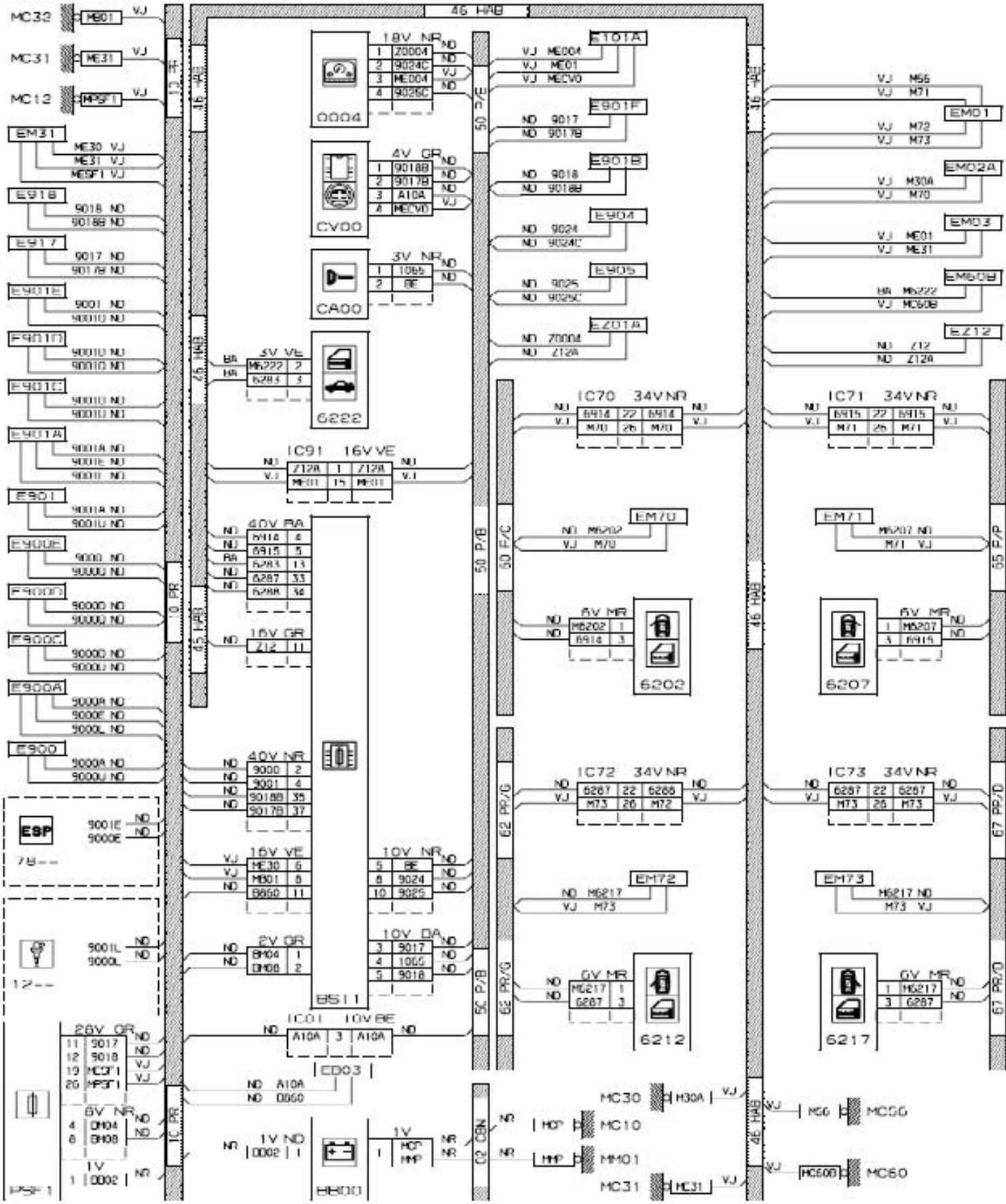
MC32
MC31
MC12
EM31
E918
E917
E901E
E901D
E901C
E901A
E901
E900E
E900D
E900C
E900A
E900
ESP
0004
CV00
CA00
6222
IC91 16V VE
B511
IC01 10V BE
CD03
BB00
E101A
E901F
E901B
E904
E905
EZ01A
IC70 34V NR
IC71 34V NR
EM70
EM71
6202
6207
IC72 34V NR
IC73 34V NR
EM72
EM73
6212
6217
EM01
EM02A
EM03
EM60B
EZ12
MC30
MC10
MM01
MC31
MC56
MC60

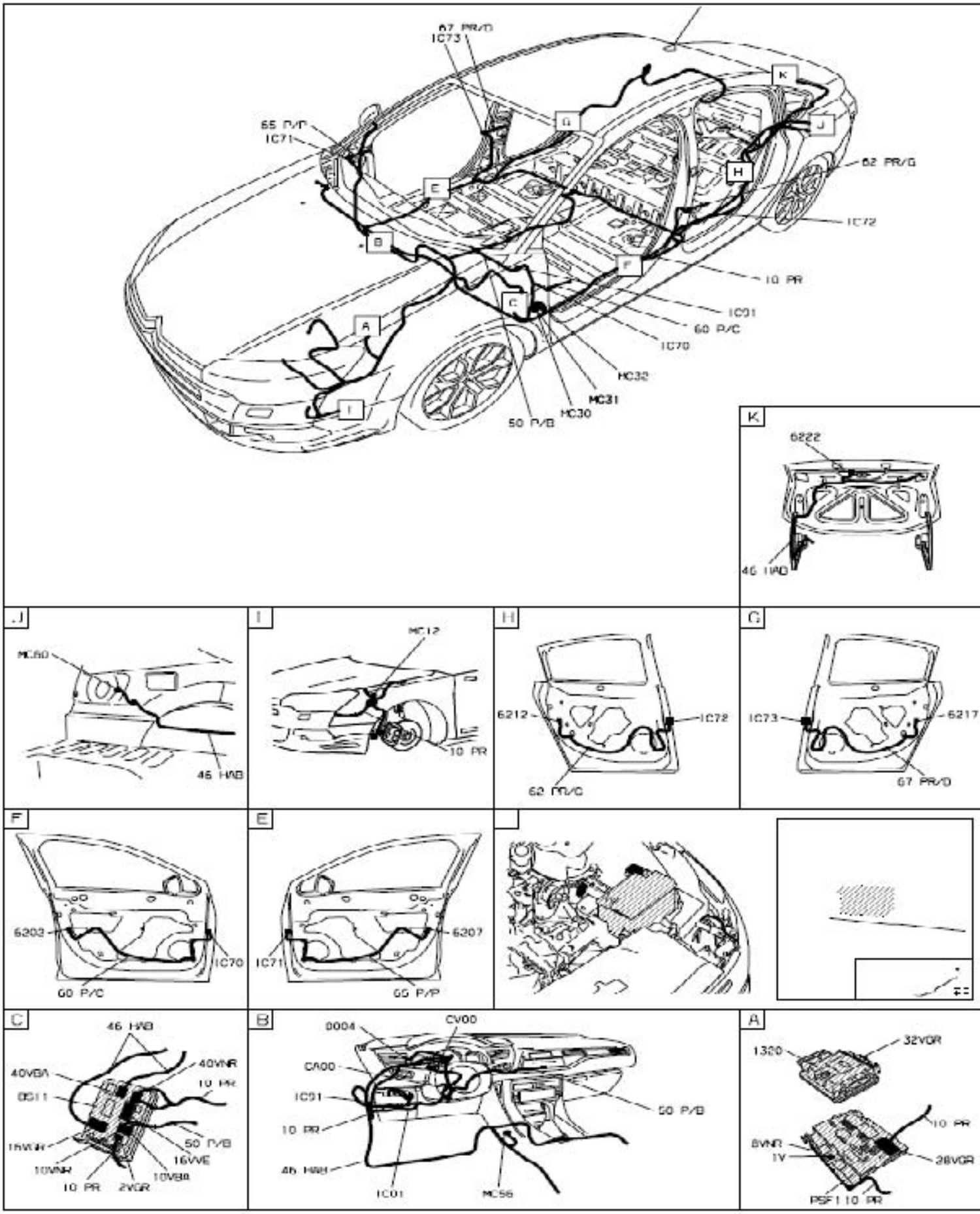
67 PR/D
IC73
65 P/P
IC71
62 PR/G
IC72
10 PR
IC01
60 P/C
IC70
MC32
MC31
MC30
50 P/B
6222
46 HAD
MC60
46 HAB
MC12
10 PR
6212
IC72
62 PR/C
IC73
6217
67 PR/D
6202
IC70
60 P/C
IC71
6207
65 P/P
46 HAB
40VNR
10 PR
50 P/B
16VVE
10VBB
10 PR
2VGR
0004
CV00
CA00
IC01
10 PR
46 HAB
IC01
MC56
50 P/B
1320
32VGR
10 PR
8VNR
1V
28VGR
PSF110 PR

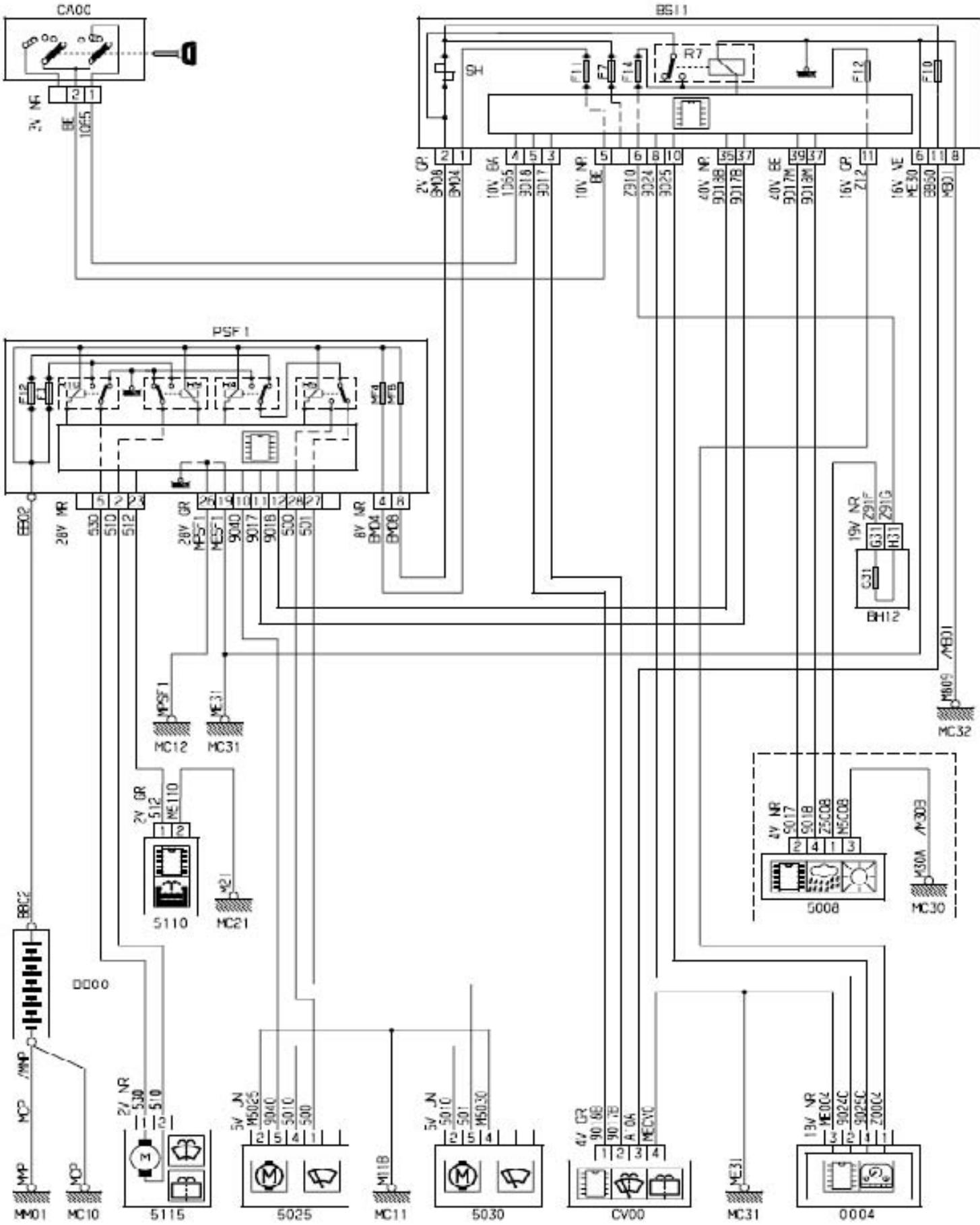
CA00
BS11
PSF1
BH12
MC12
MC31
MC21
5110
MC32
5008
MC30
D000
MM01
MC10
5115
5025
MC11
5030
CV00
MC31
0004

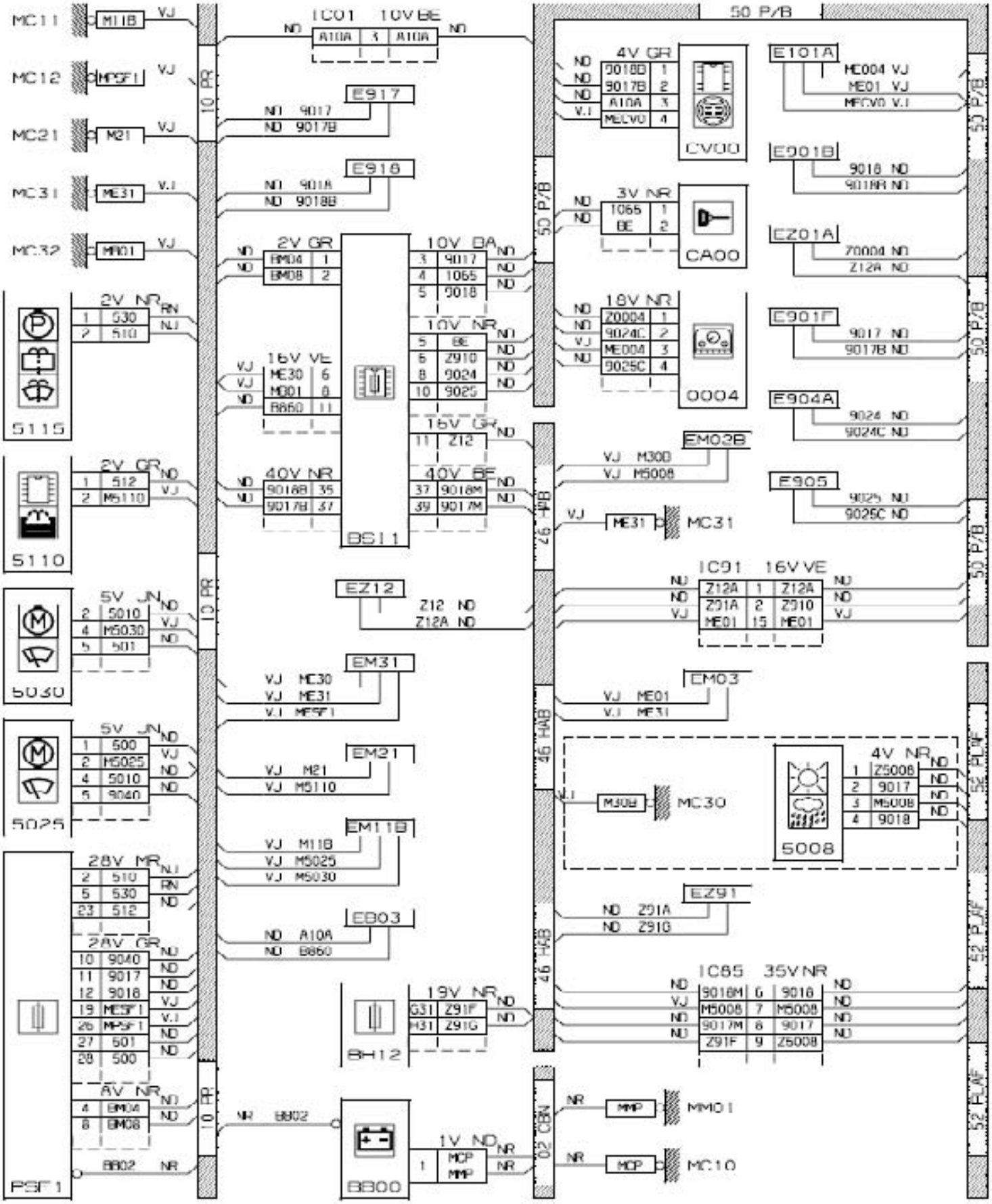
MC11
MC12
MC21
MC31
MC32
M11B
M21
ME31
MM01
10 PR
IC01 10V BE
A10A
E917
9017
9017B
E918
9018A
9018B
2V GR
BM04
BM08
10V BA
9017
1065
9018
2V NR
530
510
10V NR
BE
Z910
9024
9025
16V VE
ME30
M301
B860
16V GR
Z12
S115
40V NR
9018B
9017B
40V BE
9018M
9017M
BS11
2V GR
512
M5110
S110
EZ12
Z12 ND
Z12A ND
5V JN
5010
M5030
501
S030
EM31
VJ MC30
VJ ME31
VJ MF5F1
5V JN
500
M5025
5010
9040
S025
EM21
VJ M21
VJ M5110
EM11B
VJ M11B
VJ M5025
VJ M5030
28V MR
510
530
512
2AV GR
9040
9017
9018
MF5F1
501
500
EB03
ND A10A
ND B860
AV NR
BM04
BM08
BH12
19V NR
Z91F
Z91G
PSF1
BB02
BB00
1V ND
MCP
MMP
50 P/B
4V GR
9018B
9017B
A10A
MEVO
CV00
3V NR
1065
BE
CA00
18V NR
Z0004
9024C
ME004
9025C
0004
E101A
ME004 VJ
ME01 VJ
MFCV0 VJ
E901B
9018 ND
9018A ND
EZ01A
Z0004 ND
Z12A ND
E901F
9017 ND
9017B ND
E904A
9024 ND
9024C ND
EM02B
VJ M300
VJ M5008
E905
9025 ND
9025C ND
VJ ME31
MC31
IC91 16V VE
Z12A
Z91A
ME01
EM03
VJ ME01
VJ ME31
M300
MC30
4V NR
Z5008
9017
M5008
9018
5008
EZ91
ND Z91A
ND Z91G
IC85 35V NR
9018M
M5008
9017M
Z91F
9018
9017
Z5008
46 HAB
NR BB02
1V ND
MCP
MMP
MMP
MM01
MCP
MC10

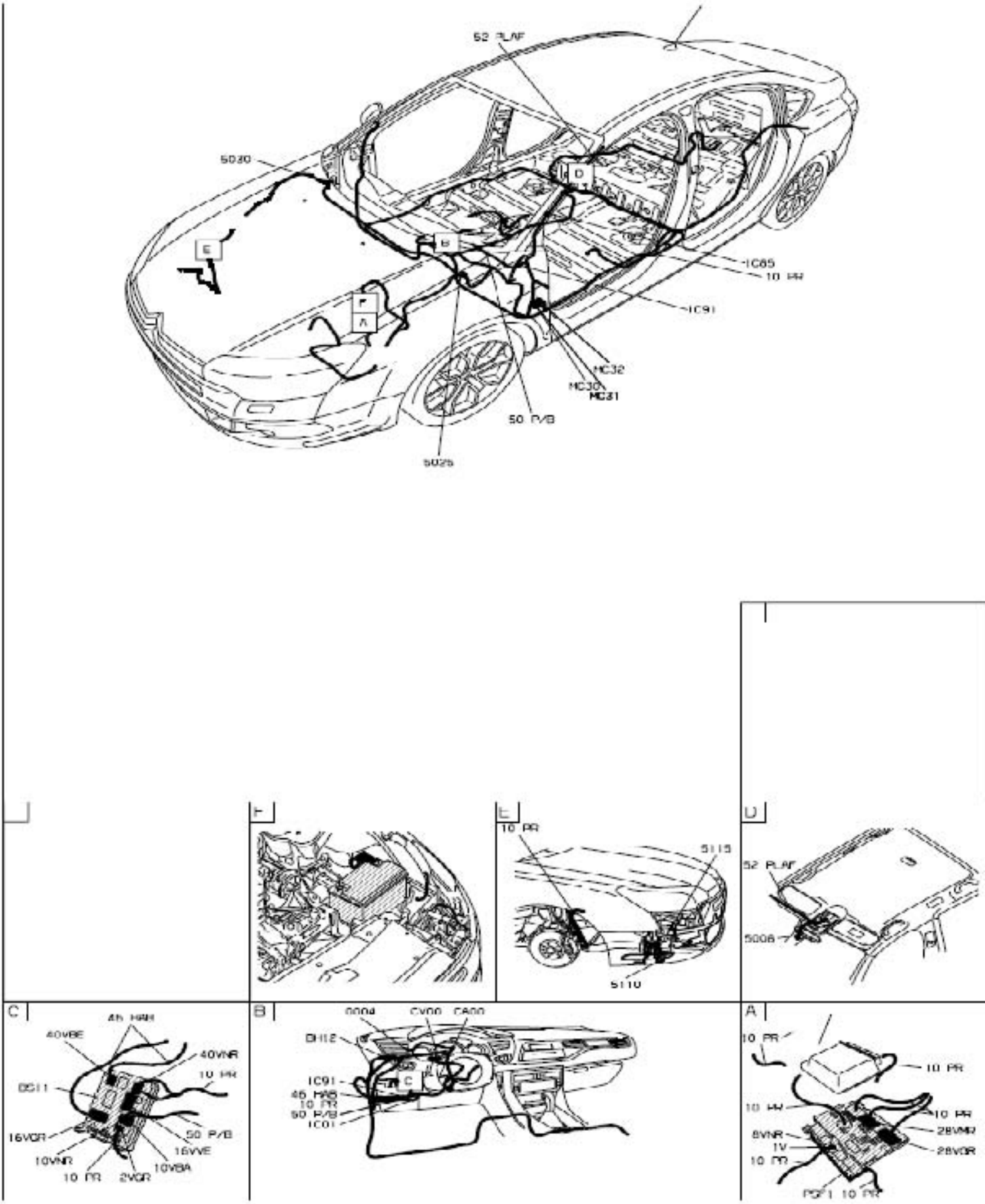
52 PLAF
5030
E
B
D
F
A
1C65
10 PR
1C91
MC32
MC30
MC31
50 P/B
5025
F
E
10 PR
5115
5110
D
52 PLAF
5008
C
40VBE
40VNR
10 PR
0511
16VGR
50 P/B
16VVE
10VNR
10VBA
10 PR
2VGR
B
0004
CV00
CA00
0112
1C91
C
46 MAB
10 PR
50 P/B
1C01
A
10 PR
10 PR
10 PR
10 PR
8VNR
28VMR
1V
28VGR
10 PR
PGF1 10 PR

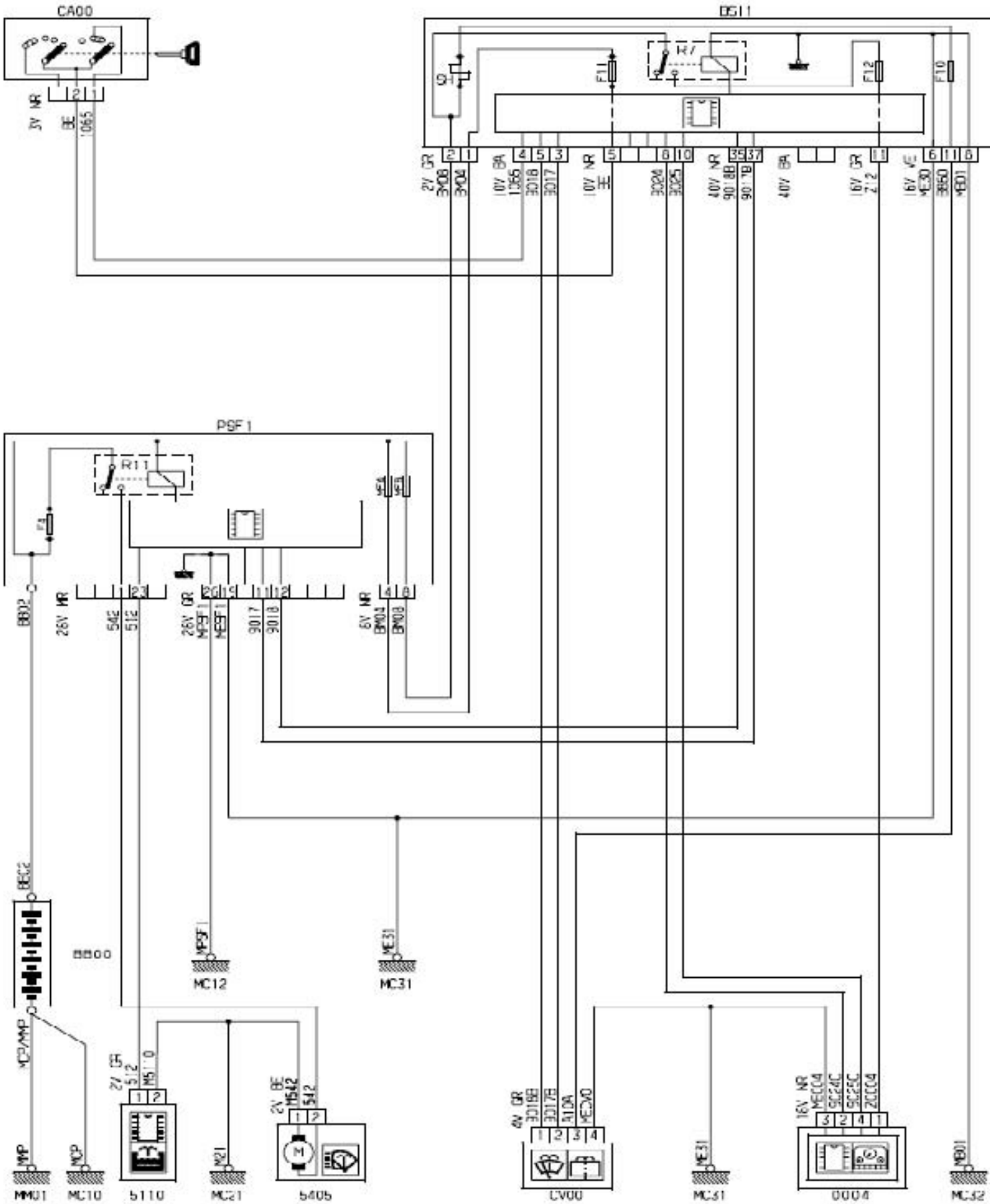
CA00
DS11
PSF1
MC12
MC31
MC10
5110
MC21
5405
CV00
MC31
0004
MC32

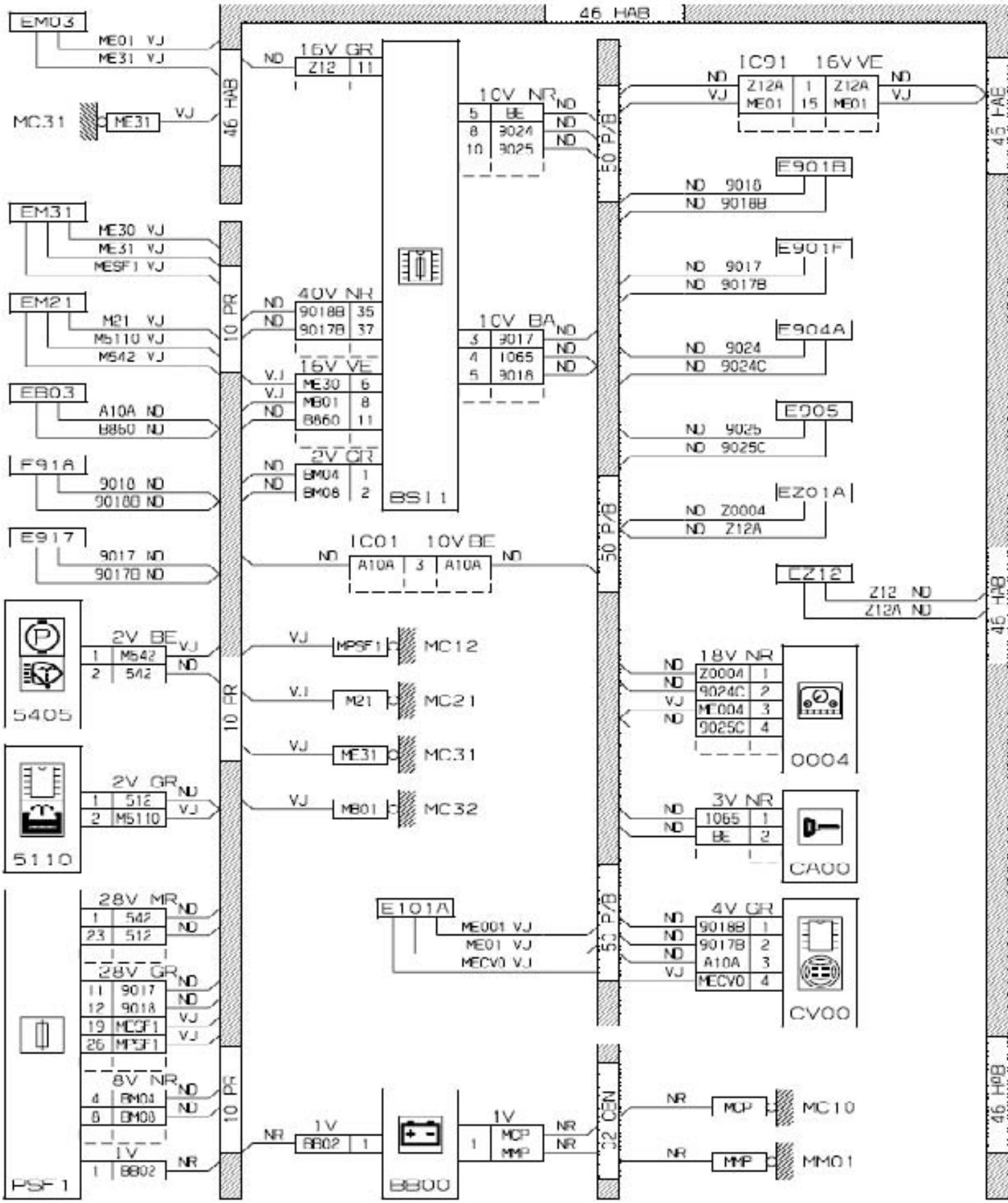
46 HAB
EM03
ME01 VJ
ME31 VJ
MC31
ME31
VJ
16V GR
Z12 11
10V NR
5 BE
8 9024
10 9025
IC91 16V VE
Z12A 1 Z12A
ME01 15 ME01
E901B
9018
9018B
EM31
ME30 VJ
ME31 VJ
MESF1 VJ
E901F
9017
9017B
EM21
M21 VJ
M5110 VJ
M542 VJ
40V NR
90188 35
9017B 37
10V BA
3 9017
4 1065
5 9018
E904A
9024
9024C
EB03
A10A ND
B860 ND
16V VE
ME30 6
MB01 8
B860 11
E905
9025
9025C
F91A
9018 ND
9018B ND
2V GR
BM04 1
BM08 2
BS11
EZ01A
Z0004
Z12A
E917
9017 ND
9017B ND
IC01 10V BE
A10A 3 A10A
CZ12
Z12 ND
Z12A ND
2V BE
M542
542
5405
MC12
MC21
MC31
MC32
18V NR
Z0004 1
9024C 2
MC004 3
9025C 4
0004
2V GR
512
M5110
5110
3V NR
1065 1
BE 2
CA00
28V MR
542
512
E101A
ME001 VJ
ME01 VJ
MECV0 VJ
4V GR
9018B 1
9017B 2
A10A 3
MECV0 4
CV00
28V GR
9017
9018
MCSF1
MPSF1
8V NR
BM04
BM08
1V
B802
PSF1
BB00
MCP
MMP
MC10
MM01
10 PR
50 P/B
32 CEN
45 HAE

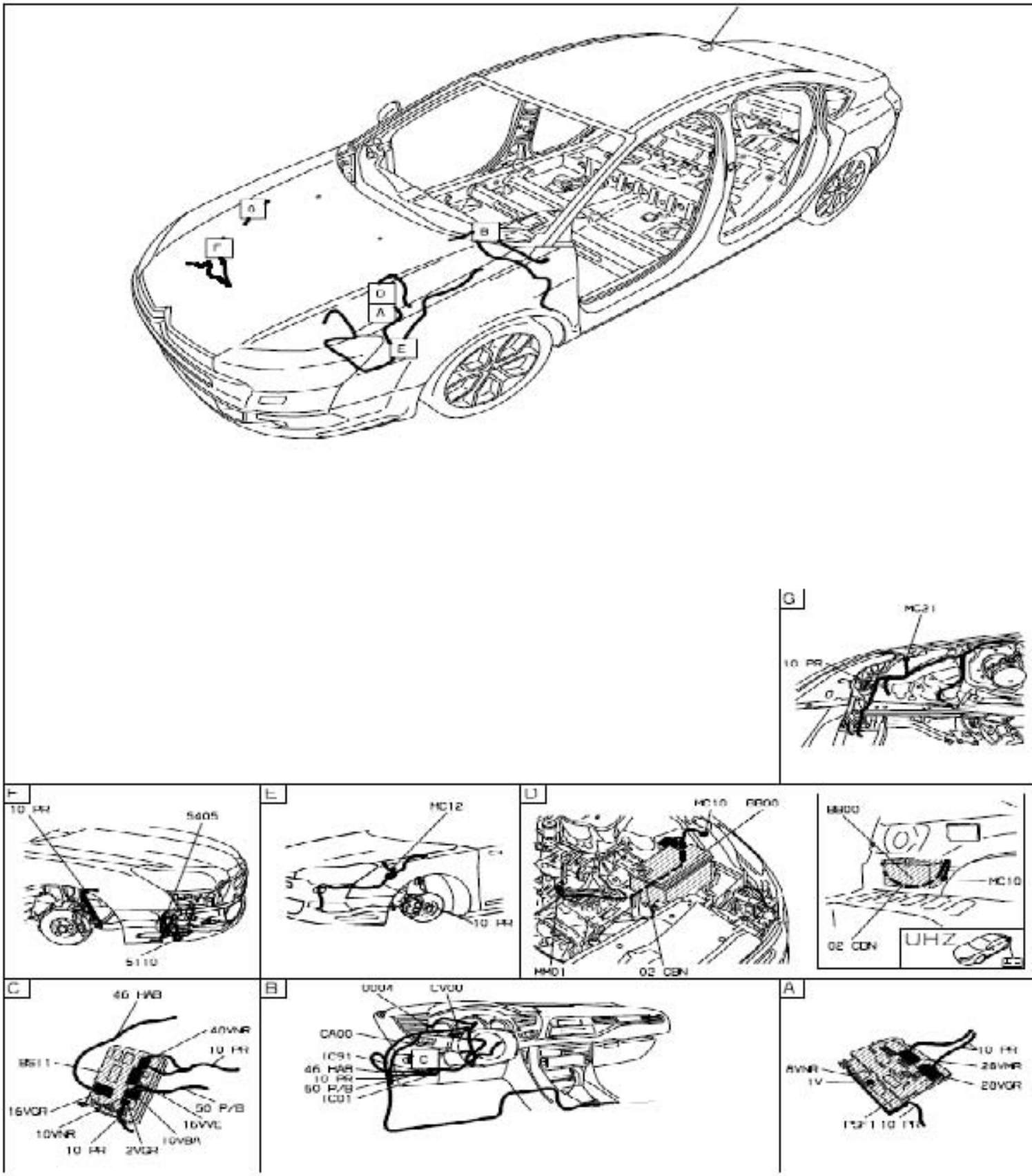
A
B
C
D
E
F
G
MC21
10 PR
10 PH
5605
5110
MC12
10 PH
MC10
MM01
02 CBN
MC10
02 CBN
UHZ
46 HWB
40VNR
10 PH
16VGR
50 P/B
16VVL
10VNR
10 PH
2VGR
10VBR
CA00
ICS1
46 HAR
10 PR
50 P/B
ICD1
10 PH
28VNR
20VGR
8VNR
1V

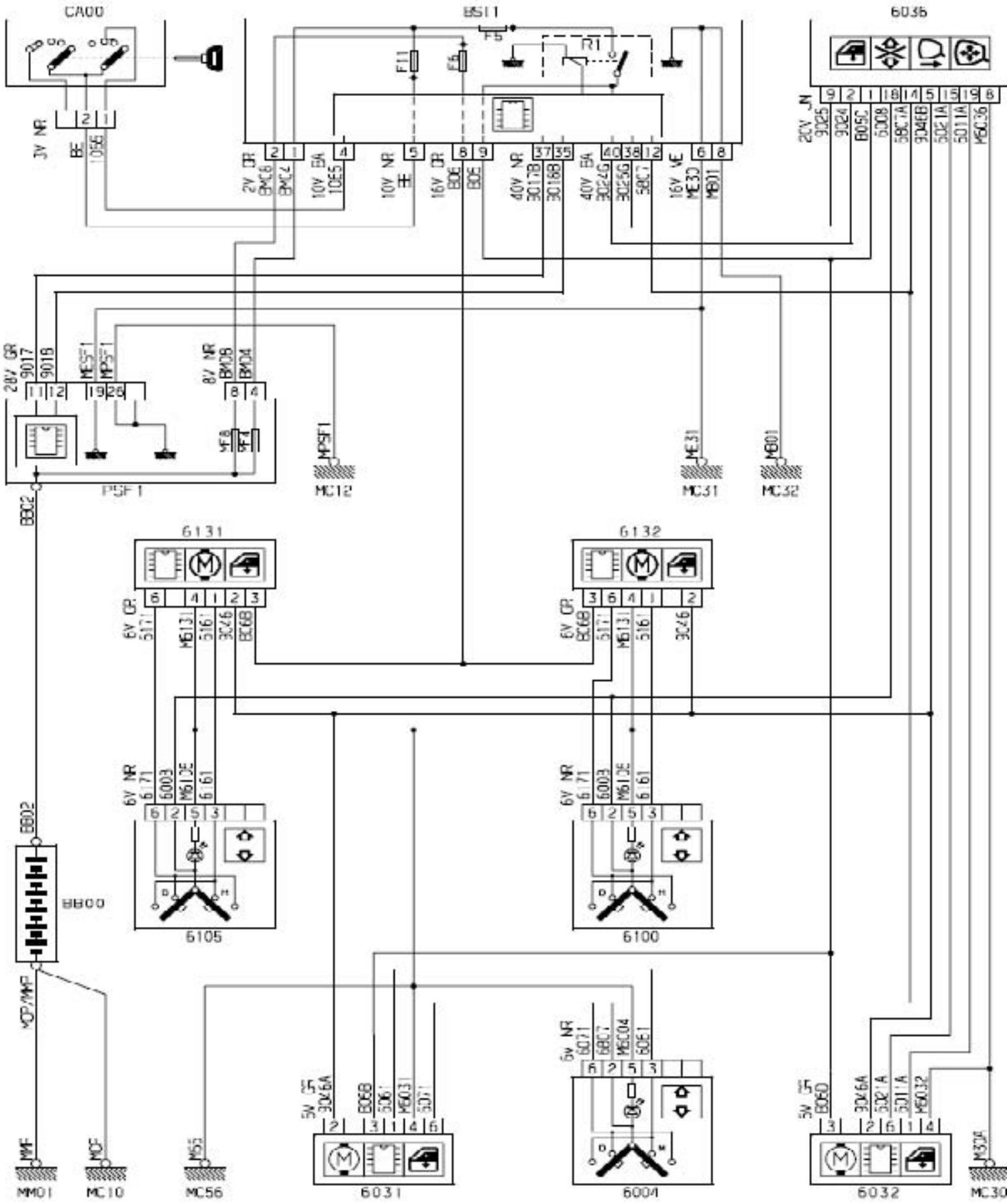
CA00
BS11
6036
PSF1
MC12
MC31
MC32
6131
6132
6105
6100
BB00
MM01
MC10
MC56
6031
6004
6032
MC30

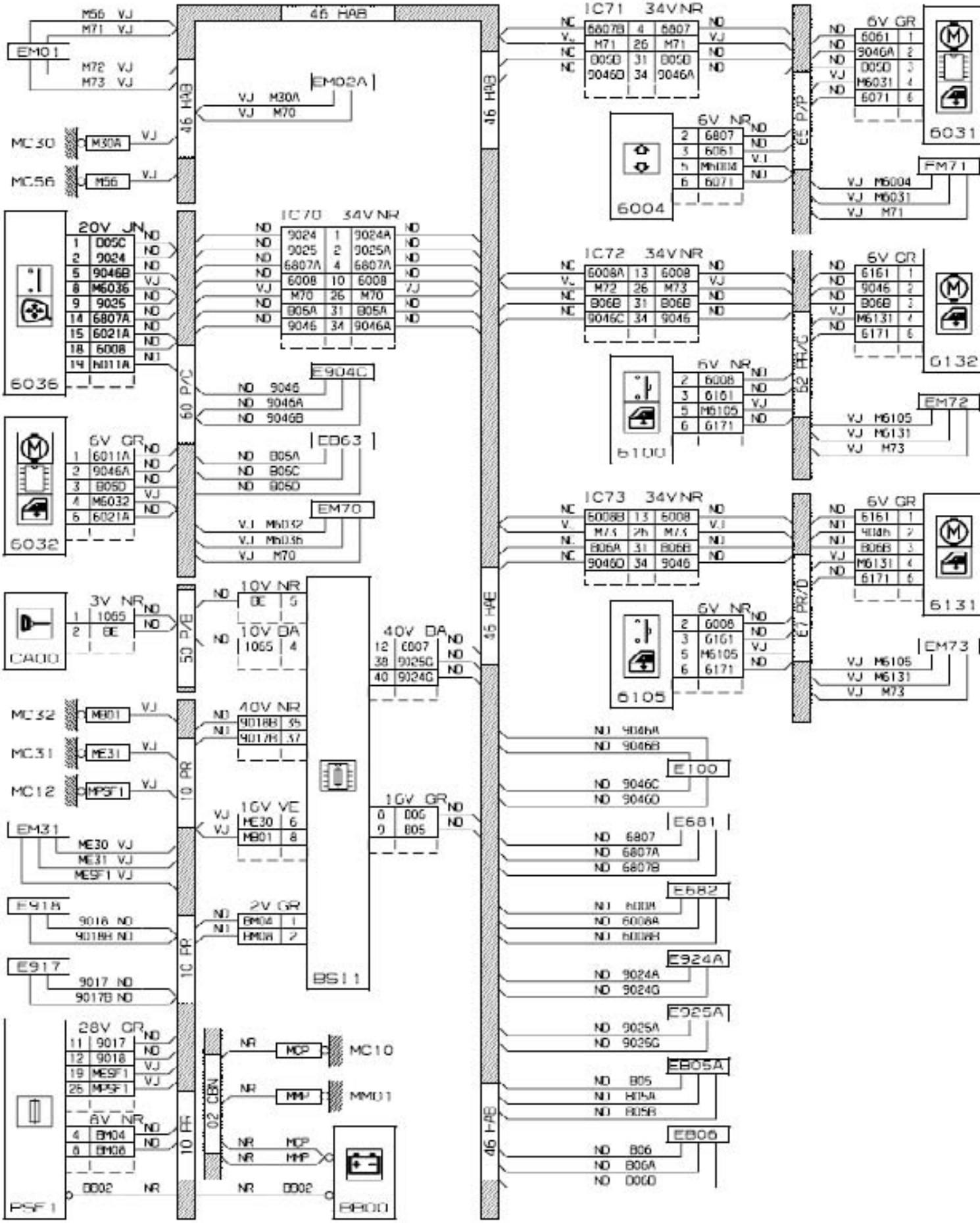
46 HAB
EM01
M66 VJ
M71 VJ
M72 VJ
M73 VJ
EM02A
VJ M30A
VJ M70
MC30
M30A
MC56
M56
IC71 34V NR
6007B 4 6007
M71 26 M71
D05D 31 D05D
9046D 34 9046A
6V GR
6061 1
9046A 2
D05D 3
M6031 4
6071 6
6031
6V NR
2 6007
3 6061
5 M6004
6 6071
6004
EM71
VJ M6004
VJ M6031
VJ M71
20V JN
1 D05C
2 9024
5 9046B
8 M6036
9 9025
14 6807A
15 6021A
18 6008
19 M011A
6036
IC70 34V NR
9024 1 9024A
9025 2 9025A
6807A 4 6807A
6008 10 6008
M70 26 M70
B05A 31 B05A
9046 34 9046A
60 P/C
E904C
9046
9046A
9046B
6V GR
1 6011A
2 9046A
3 B05D
4 M6032
6 6021A
6032
EB63
B05A
B05C
B05D
EM70
VJ M6032
VJ M6036
VJ M70
IC72 34V NR
6008A 13 6008
M72 26 M73
B06B 31 B06B
9046C 34 9046
6V GR
6161 1
9046 2
B06B 3
M6131 4
6171 6
6132
6V NR
2 6008
3 6161
5 M6105
6 6171
6100
EM72
VJ M6105
VJ M6131
VJ M73
IC73 34V NR
6008B 13 6008
M73 26 M73
B06A 31 B06B
9046D 34 9046
6V GR
6161 1
9046A 2
B06B 3
M6131 4
6171 6
6131
6V NR
2 6008
3 6161
5 M6105
6 6171
6105
EM73
VJ M6105
VJ M6131
VJ M73
CA00
3V NR
1 1065
2 BE
50 P/E
10V NR
BE 5
10V DA
1065 4
40V DA
12 6007
38 9025G
40 9024G
MC32
M801
MC31
ME31
MC12
MPSF1
10 PR
40V NR
9018B 35
9017M 37
10V GR
0 D05
9 B05
10V VE
ME30 6
M801 8
EM31
ME30 VJ
ME31 VJ
MESF1 VJ
E918
9018 ND
9018B ND
2V GR
BM04 1
HM08 2
E917
9017 ND
9017B ND
BS11
28V GR
11 9017
12 9018
19 MESF1
25 MPSF1
8V NR
4 BM04
8 BM08
PSF1
D002 NR
02 CBN
NR MCP
MC10
NR MMP
MM01
NR MCP
NR MMP
NR D002
BA00
46 HAB
46 HAE
46 HAB
46 HAE
E100
9046A
9046B
9046C
9046D
E681
6807
6807A
6807B
E682
6008A
6008B
E924A
9024A
9024G
E925A
9025A
9025G
EB05A
B05
B05A
B05B
EB06
B06
B06A
D05D

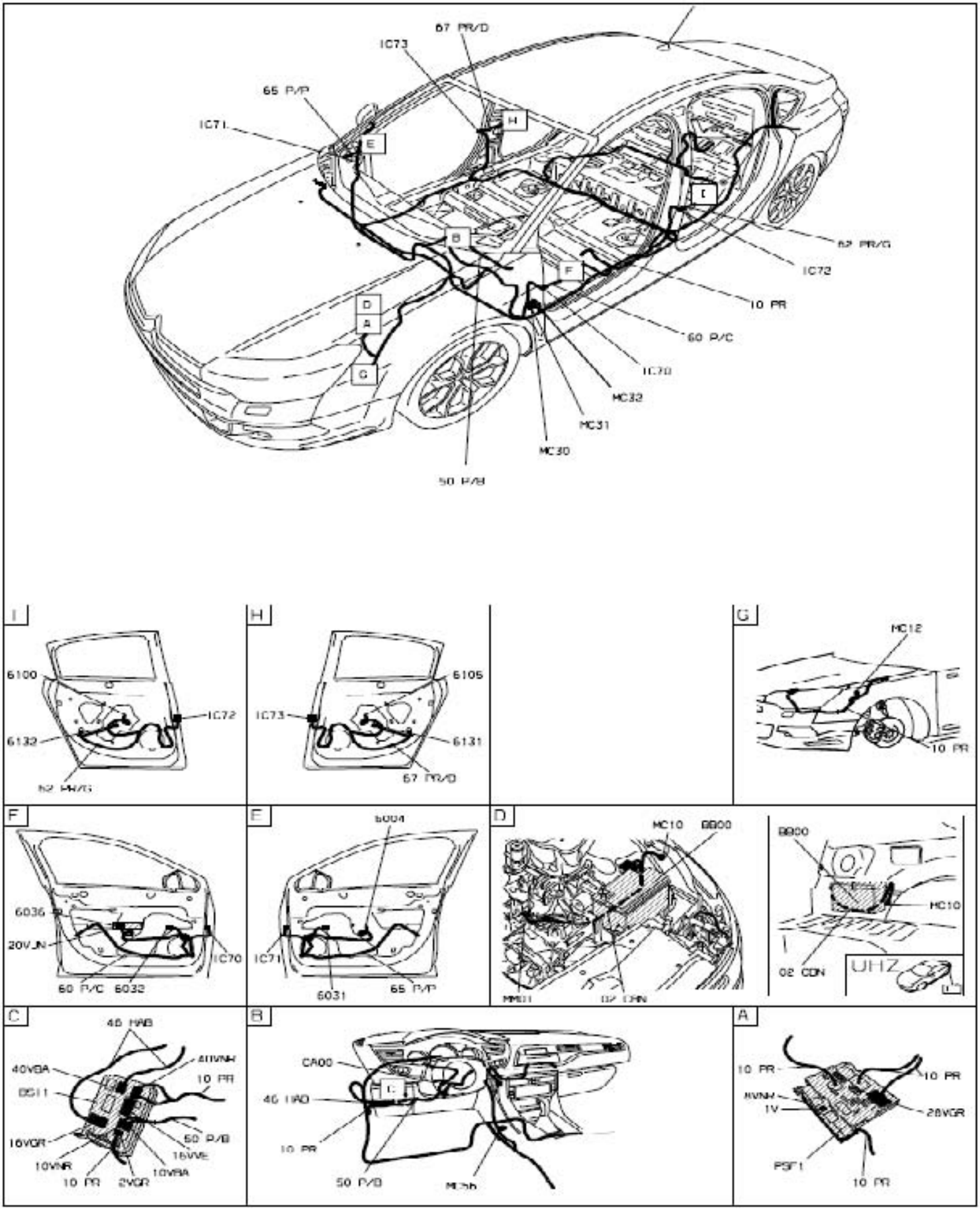
67 PR/D
IC73
65 P/P
IC71
H
E
I
B
F
D
A
G
62 PR/G
IC72
10 PR
60 P/C
IC70
MC32
MC31
MC30
50 P/B
6100
IC72
6132
62 PR/G
6105
IC73
6131
67 PR/D
MC12
10 PR
6036
20V_N
IC70
60 P/C 6032
6004
IC71
6031
65 P/P
MC10 BB00
BB00
MC10
02 CDN
UHZ
46 HAB
40VBA
BS11
10 PR
16VGR
50 P/B
10VNR
10 PR 2VGR
CA00
46 HAD
10 PR
50 P/B
10 PR
10 PR
1V
28VGR
PSF1
10 PR

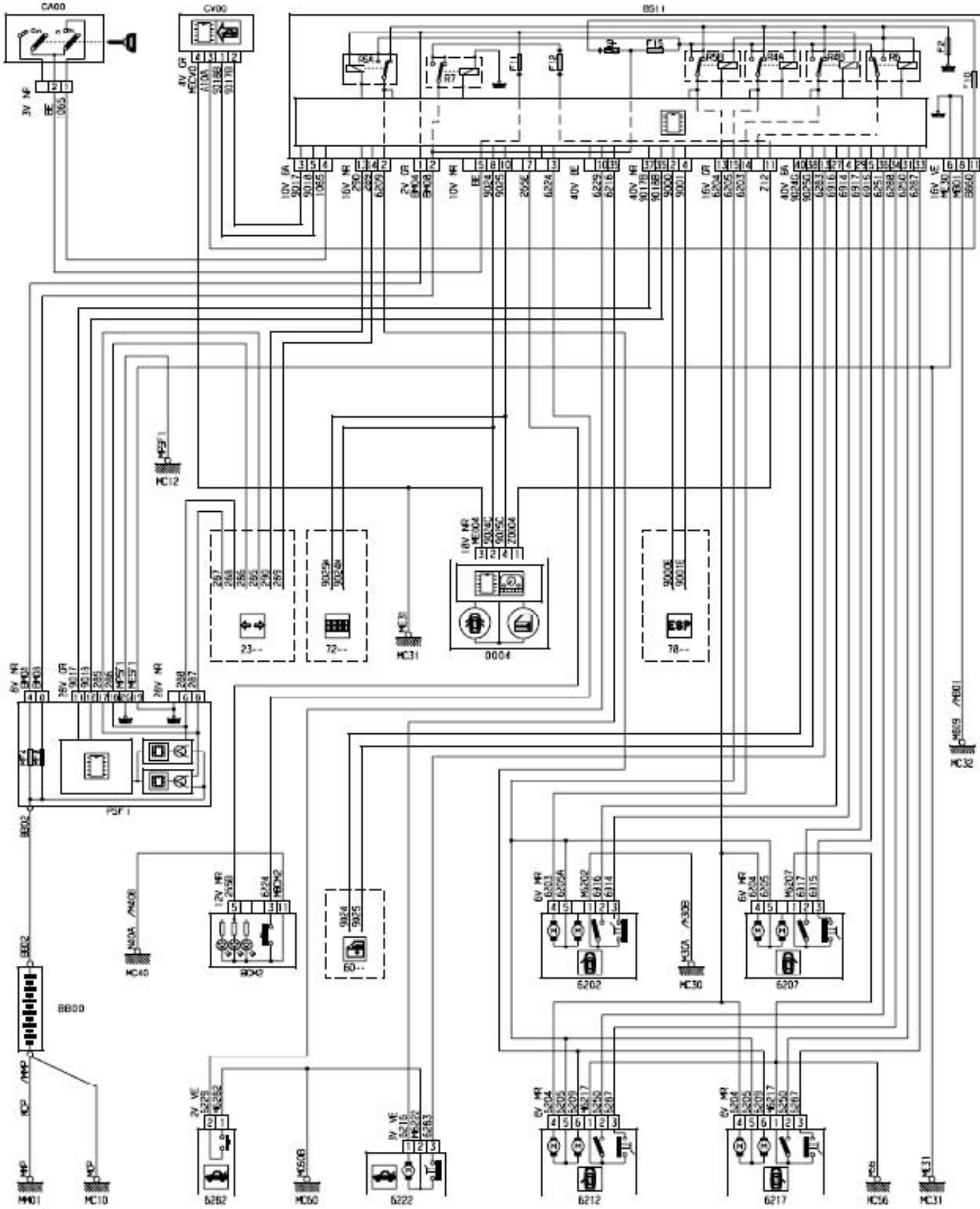
CA00
CV00
BS11
MC12
MC31
0004
ESP
78--
23--
72--
PSF1
MC32
MC40
BB00
MC30
6202
6207
6212
6217
6222
6282
MC10
MC56

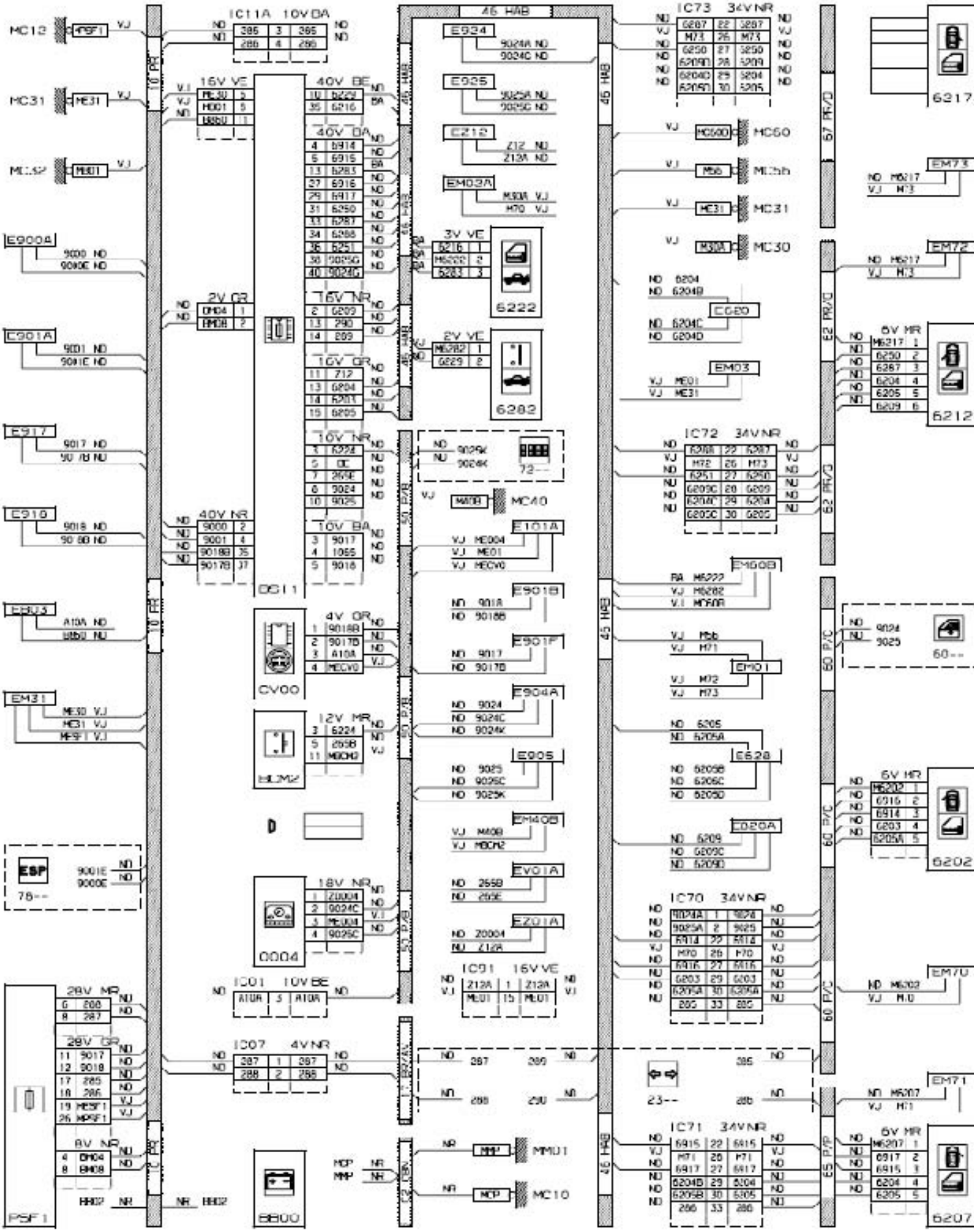
IC11A 10V BA
16V VE
40V BE
40V DA
16V NR
2V GR
16V GR
10V NR
40V NR
10V BA
4V GR
12V MR
18V NR
28V MR
28V GR
8V NR
IC01 10V BE
IC07 4V NR
IC73 34V NR
IC72 34V NR
IC70 34V NR
IC71 34V NR
IC91 16V VE
3V VE
2V VE
6V MR
6222
6282
6217
6212
6202
6207
CV00
CG11
0004
8800
PSF1
ESP
MC12
MC31
MC50
MC40
MC10
MMU1
E924
E925
E212
EM03A
E901A
E917
E910
E901B
E901F
E904A
E905
E628
EV01A
E201A
EM03
EM01
EM71
EM72
EM73

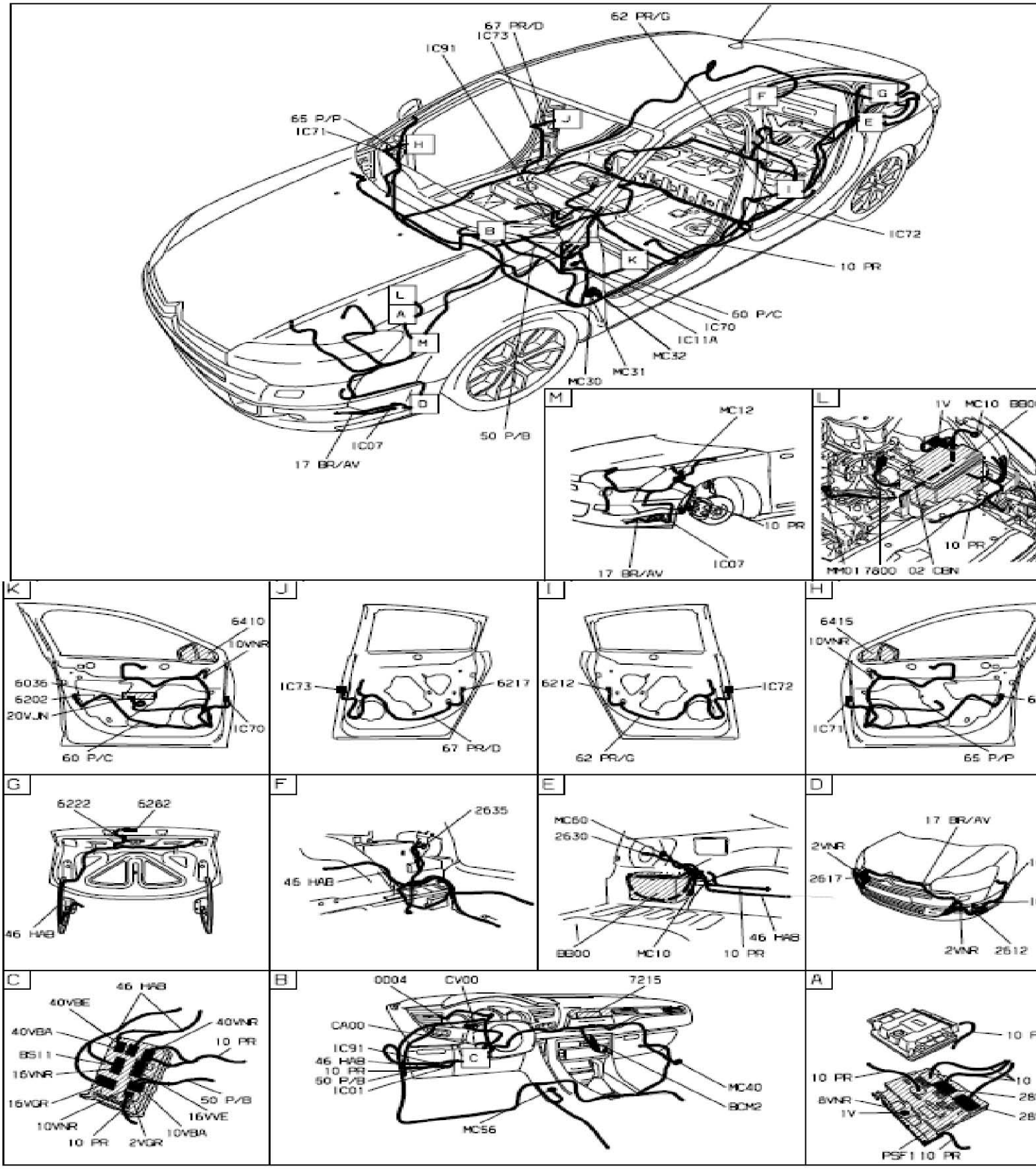
62 PR/G
67 PR/D
IC73
IC91
65 P/P
IC71
H
J
F
G
E
I
B
K
IC72
10 PR
L
A
M
60 P/C
IC70
IC11A
MC32
MC31
MC30
D
50 P/B
IC07
17 BR/AV
M
MC12
10 PR
17 BR/AV
IC07
L
1V MC10 BB0
10 PR
MM017800 02 CBN
K
6410
10VNR
6036
6202
20VJN
IC70
60 P/C
J
IC73
6217
67 PR/D
I
6212
IC72
62 PR/G
H
6415
10VNR
IC71
65 P/P
G
6222
6262
46 HAB
F
2635
46 HAB
E
MC60
2630
46 HAB
BB00
MC10
10 PR
D
17 BR/AV
2VNR
2617
2VNR
2612
C
46 HAB
40VBE
40VNR
40VBA
10 PR
BS11
16VNR
16VGR
50 P/B
16VVE
10VNR
10VBA
10 PR
2VGR
B
0004
CV00
7215
CA00
IC91
46 HAB
10 PR
50 P/B
IC01
C
MC40
BCM2
MC56
A
10 PR
10 PR
8VNR
1V
PSF110 PR

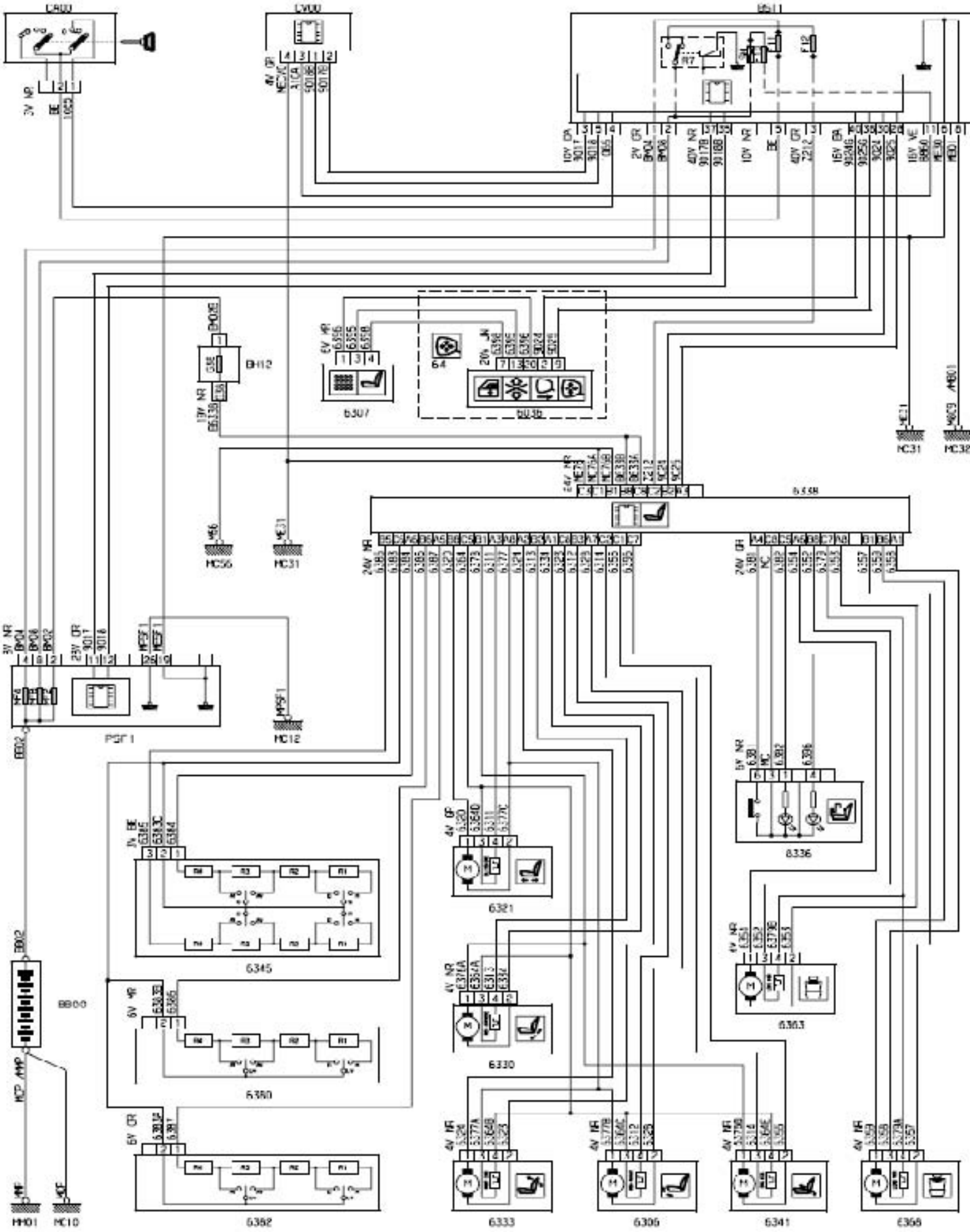

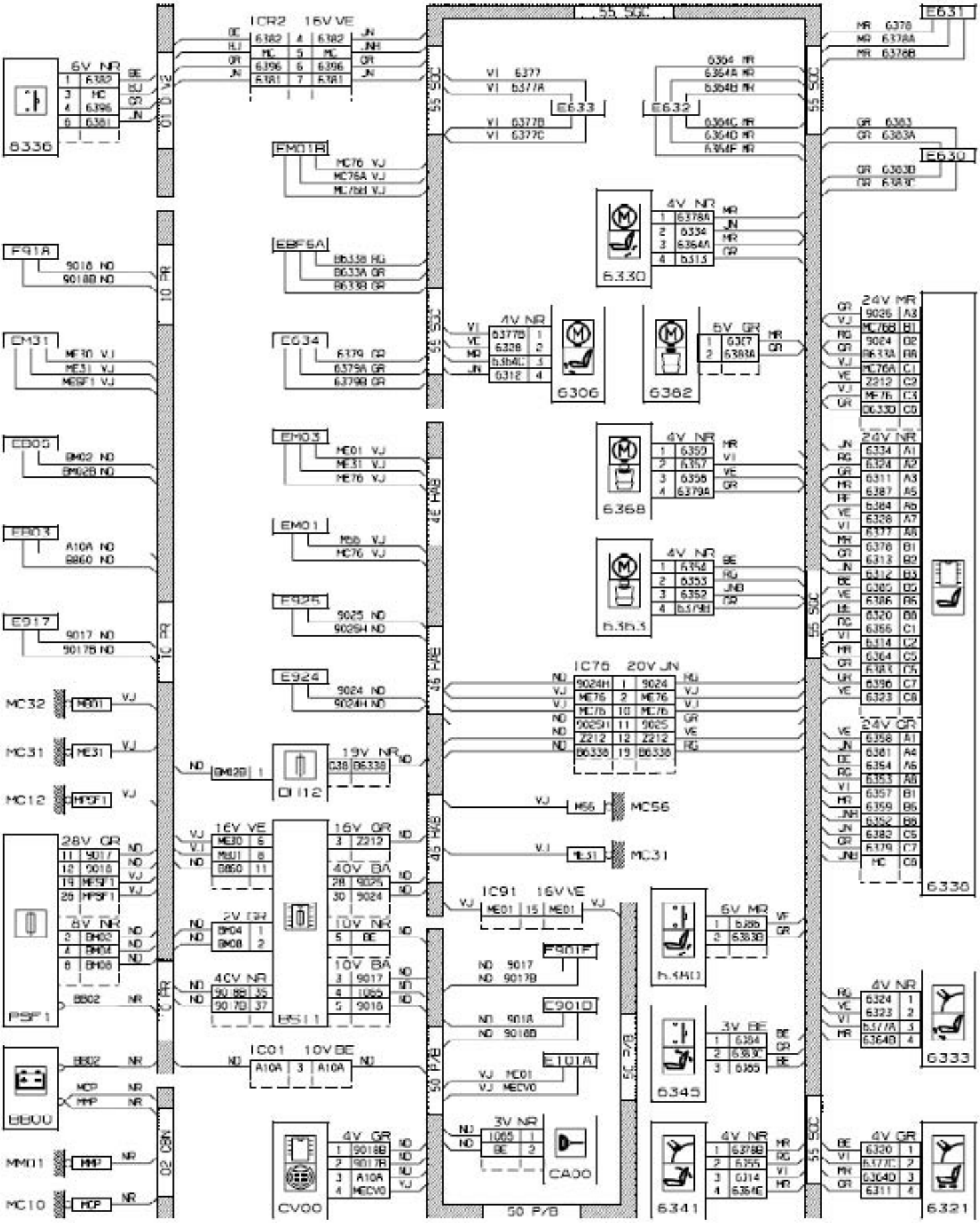
ICR2 16V VE
6336
F91A
EM31
CD05
FR01
E917
MC32
MC31
MC12
PSF1
BB00
MM01
MC10
CV00
CA00
6330
6306
6362
6368
6345
6341
6333
6321
6330
E631
E633
E632
E630
E634
EM03
EM01
E925
E924
DI12
BS11
IC01 10V BE
IC76 20V JN
IC91 16V VE
MC56
E901D
E101A
50 P/B

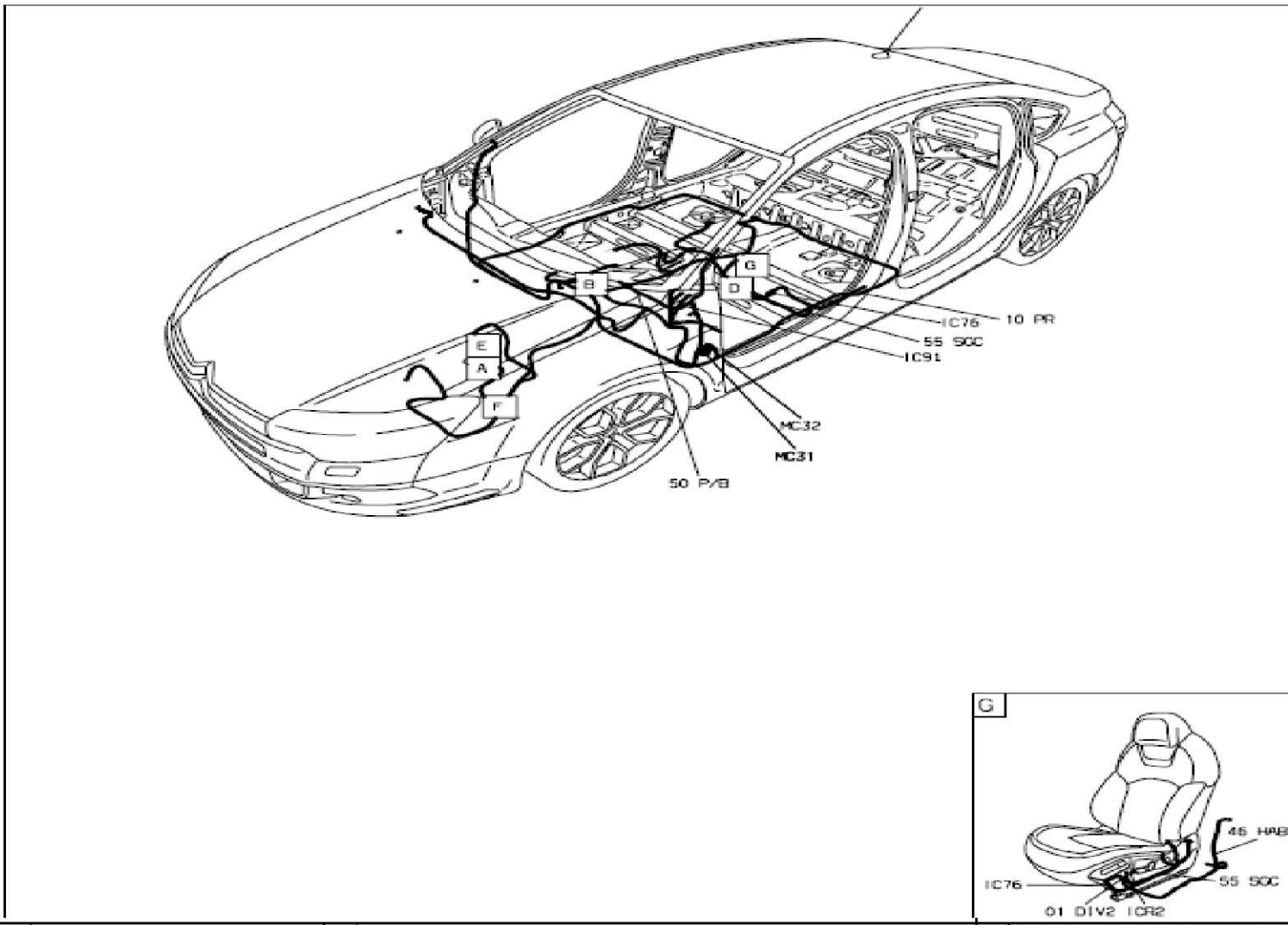
B
G
D
E
A
F
IC76
10 PR
55 SGC
IC91
MC32
MC31
50 P/B

G
46 HAB
IC76
55 SGC
01 DIV2 ICR2

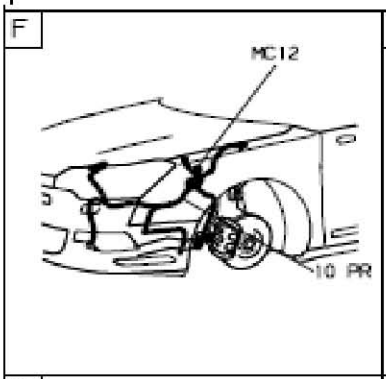
F
MC12
10 PR

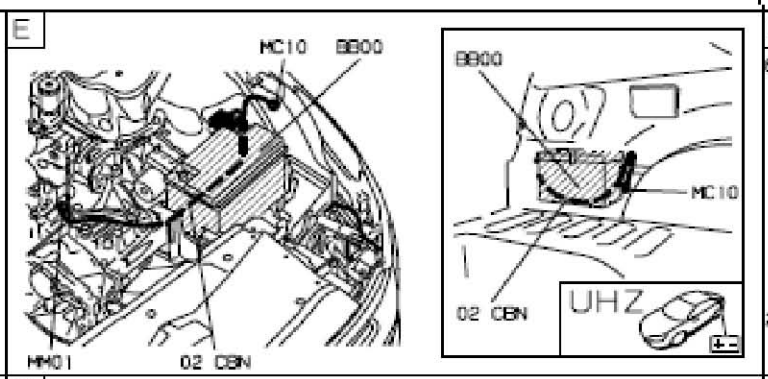
E
MC10
BB00
MM01
02 CBN
BB00
MC10
02 CBN
UHZ

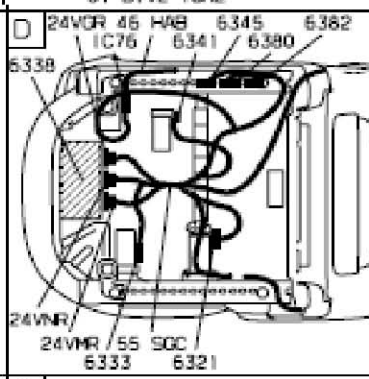
D
24VGR 46 HAB
IC76
6345
6341
6380
6382
6338
24VMR
24VMR 55 SGC
6333
6321

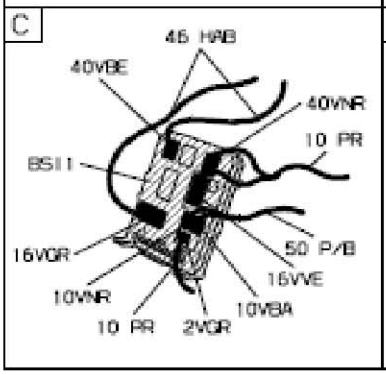
C
46 HAB
40VBE
40VNR
10 PR
BS11
16VGR
50 P/B
16VVE
10VNR
10VBA
10 PR
2VGR

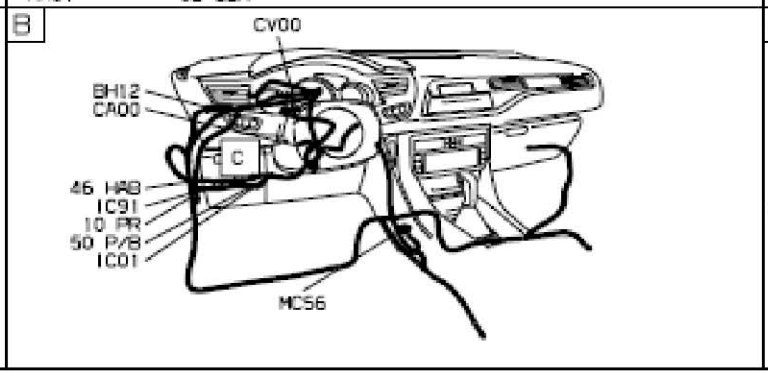
B
CV00
BH12
CA00
C
46 HAB
IC91
10 PR
50 P/B
IC01
MC56

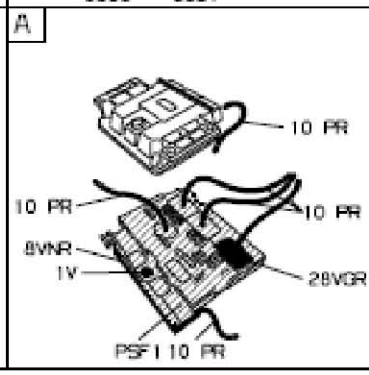
A
10 PR
10 PR
10 PR
8VNR
1V
28VGR
PSF1 10 PR

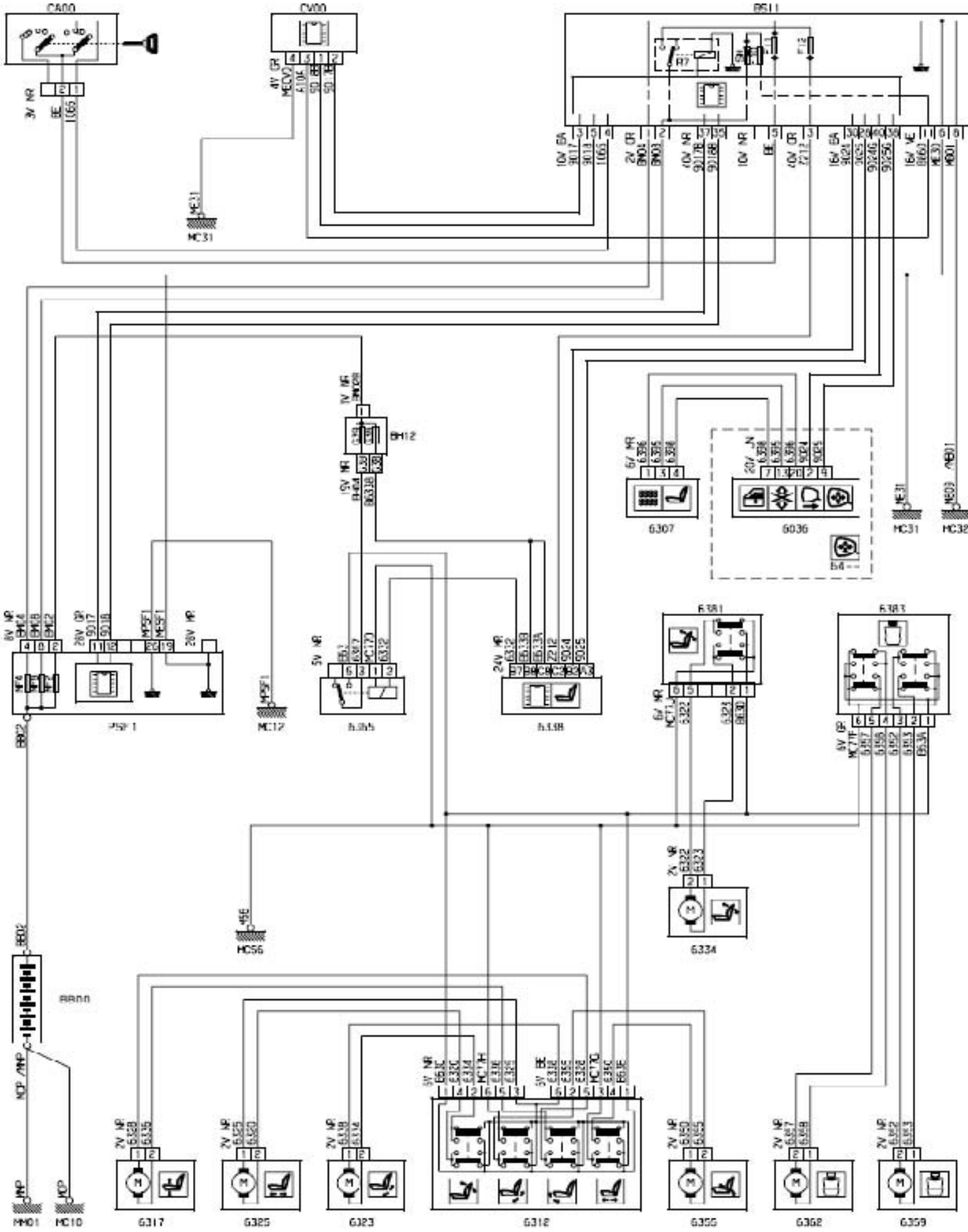
CA00
CV00
BS11
MC31
6307
6036
PSF1
MC17
6381
6383
6334
MC56
6317
6325
6323
6312
6355
6362
6359
MM01
MC10

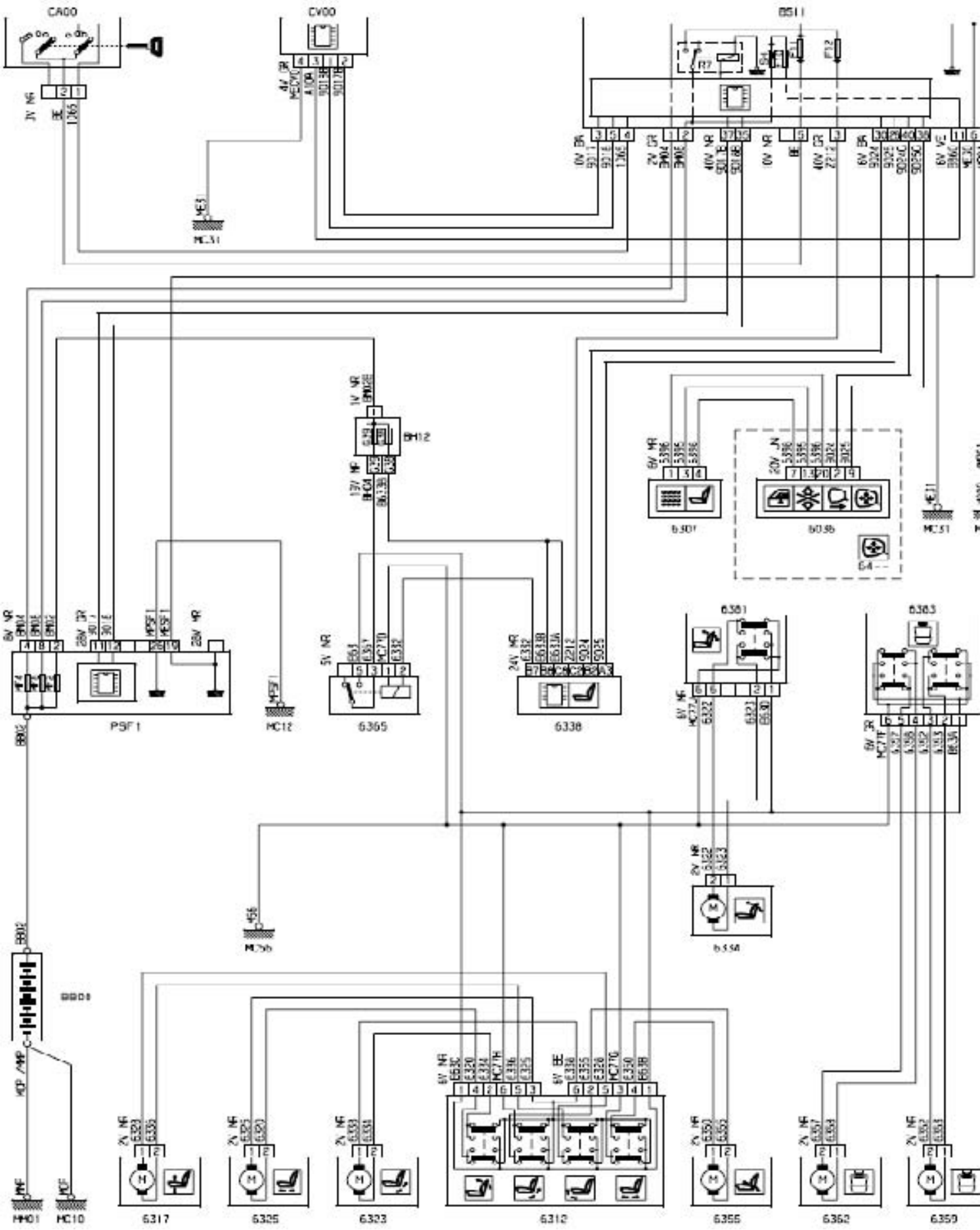
CA00
CV00
BS11
PSF1
MC12
6365
6338
6317
6325
6323
6312
6355
6362
6359
MC10

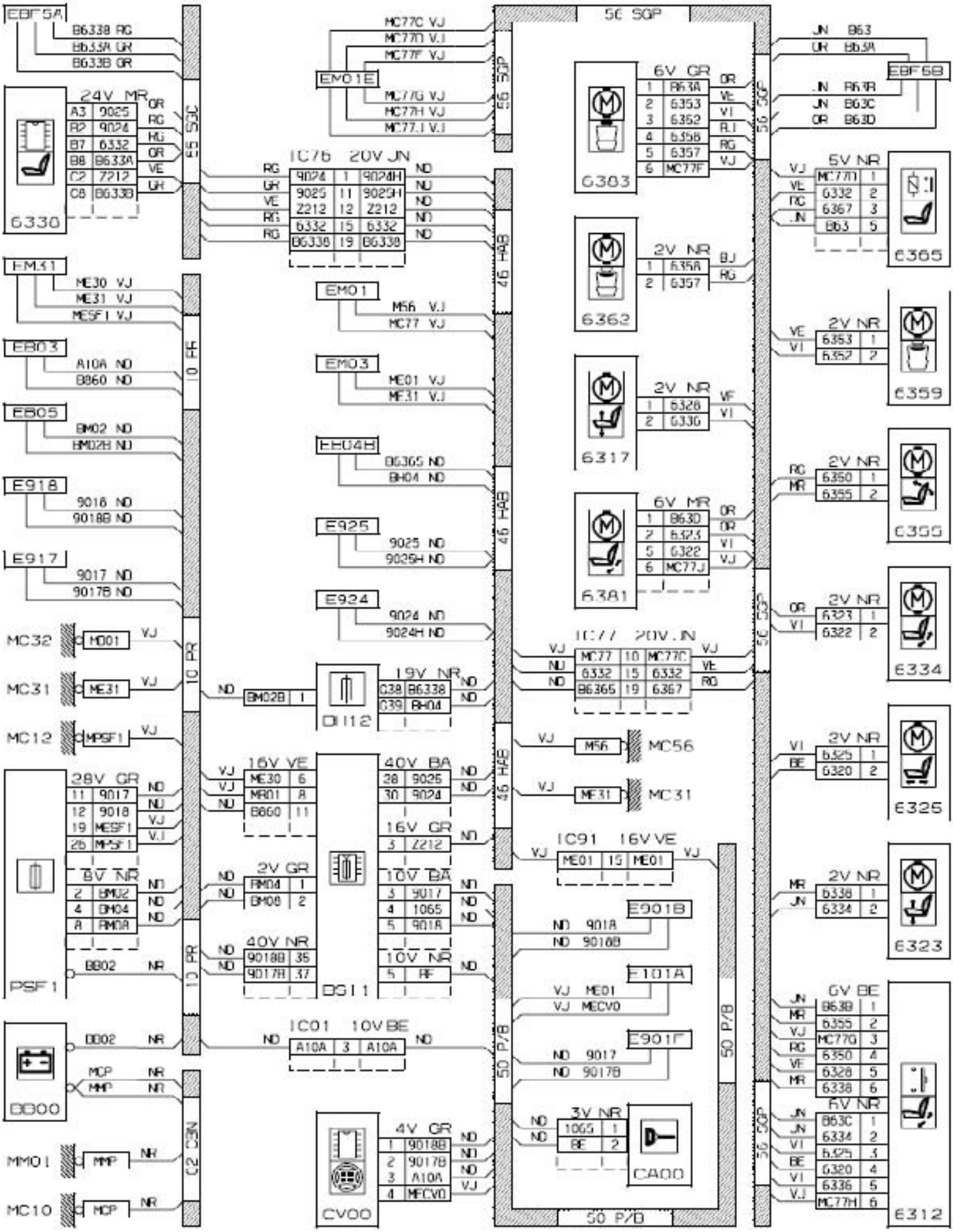
EBF5A
B633B RG
B633A GR
B633B OR
24V MR
A3 9025 OR
B2 9024 RG
B7 6332 RG
B8 B633A OR
C2 7212 VE
C8 B633B GR
6330
55 SGC
EM31
ME30 VJ
ME31 VJ
MESF1 VJ
EB03
A10A ND
B860 ND
EB05
BM02 ND
BM02B ND
E918
9018 ND
9018B ND
E917
9017 ND
9017B ND
MC32
M001 VJ
MC31
ME31 VJ
MC12
MPSF1 VJ
28V GR
11 9017 ND
12 9018 ND
19 MESF1 VJ
26 MPSF1 VJ
8V NR
2 BM02 ND
4 BM04 ND
8 BM08 ND
PSF1
B802 NR
10 PR
10 PR
B800
MCP NR
MMP NR
MM01
MMP NR
MC10
MCP NR
C2 C3N
IC76 20V JN
RG 9024 1 9024H ND
GR 9025 11 9025H ND
VE 7212 12 7212 ND
RG 6332 15 6332 ND
RG B633B 19 B633B ND
EM01E
MC77C VJ
MC77D VJ
MC77F VJ
MC77G VJ
MC77H VJ
MC77J VJ
46 HAB
EM01
M56 VJ
MC77 VJ
EM03
ME01 VJ
ME31 VJ
EB04B
B6365 ND
BH04 ND
E925
9025 ND
9025H ND
E924
9024 ND
9024H ND
19V NR
C38 B6338 ND
C39 BH04 ND
DI12
BM02B 1 ND
16V VE
ME30 6 VJ
MR01 8 VJ
B860 11 ND
2V GR
BM04 1 ND
BM08 2 ND
40V NR
9018B 35 ND
9017B 37 ND
DG11
40V BA
28 9025 ND
30 9024 ND
16V GR
3 7212 ND
10V BA
3 9017 ND
4 1065 ND
5 901A ND
10V NR
5 RF ND
IC01 10V BE
A10A 3 A10A ND
50 P/B
CV00
4V GR
1 9018B ND
2 9017B ND
3 A10A ND
4 MECV0 VJ
56 SGP
6V GR
1 B63A OR
2 6353 VE
3 6352 VI
4 6358 RI
5 6357 RG
6 MC77F VJ
6383
2V NR
1 6358 BJ
2 6357 RG
6362
2V NR
1 6328 VE
2 6330 VI
6317
6V MR
1 B63D OR
2 6323 OR
5 6322 VI
6 MC77J VJ
6381
IC77 20V JN
VJ MC77 10 MC77C VJ
ND 6332 15 6332 VE
ND B6365 19 6367 RG
VJ M56 MC56
VJ ME31 MC31
IC91 16V VE
VJ ME01 15 ME01 VJ
E901B
ND 901A
ND 9018B
E101A
VJ ME01
VJ MECV0
E901F
ND 9017
ND 9017B
3V NR
ND 1065 1
ND BF 2
CA00
JN B63
OR B63A
EBF6B
JN B63A
JN B63B
JN B63C
OR B63D
5V NR
VJ MC77D 1
VE 6332 2
RG 6367 3
JN B63 5
6365
2V NR
VE 6353 1
VI 6352 2
6359
2V NR
RG 6350 1
MR 6355 2
6355
2V NR
OR 6323 1
VI 6322 2
6334
2V NR
VI 6325 1
BE 6320 2
6325
2V NR
MR 6338 1
JN 6334 2
6323
6V BE
JN B63B 1
MR 6355 2
VJ MC77G 3
RG 6350 4
VE 6328 5
MR 6338 6
6V NR
JN B63C 1
JN 6334 2
VI 6325 3
BE 6320 4
VI 6336 5
VJ MC77H 6
6312

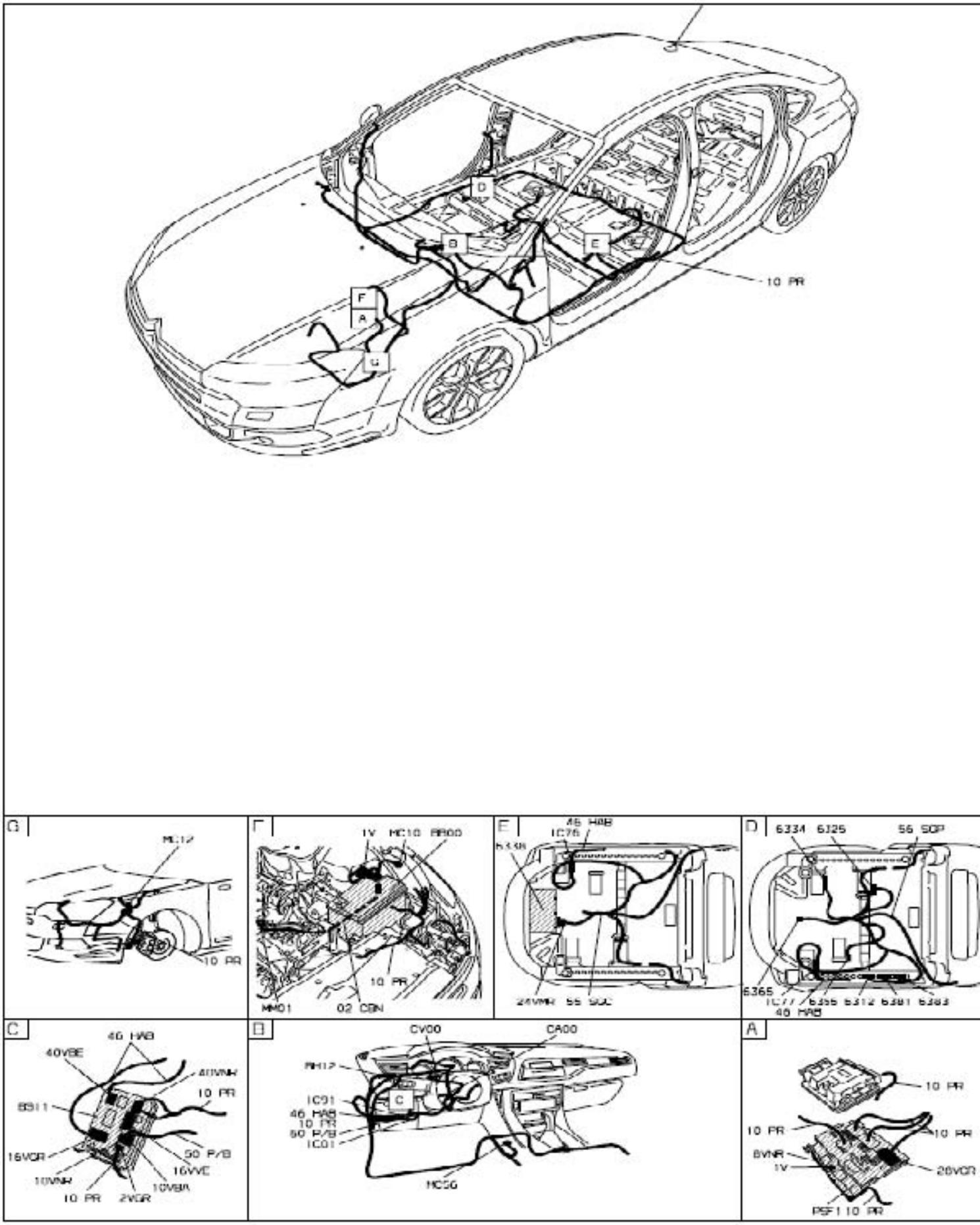
D
B
E
F
A
G
10 PR
G
MC12
10 PR
F
1V MC10 BR00
10 PR
MM01
02 CBN
E
46 HAB
IC76
24VMN 55 SOC
D
6334 6325
56 SOP
6365
46 HAB
C
46 HAB
40VBE
40VNR
10 PR
BS11
16VOR
50 P/B
16VVE
10VNR
10VBR
10 PR 2VGR
B
CV00
CA00
RH12
IC91
46 HAB
10 PR
50 P/B
IC01
C
MC56
A
10 PR
10 PR
10 PR
8VNR
1V
28VOR
PSF1 10 PR

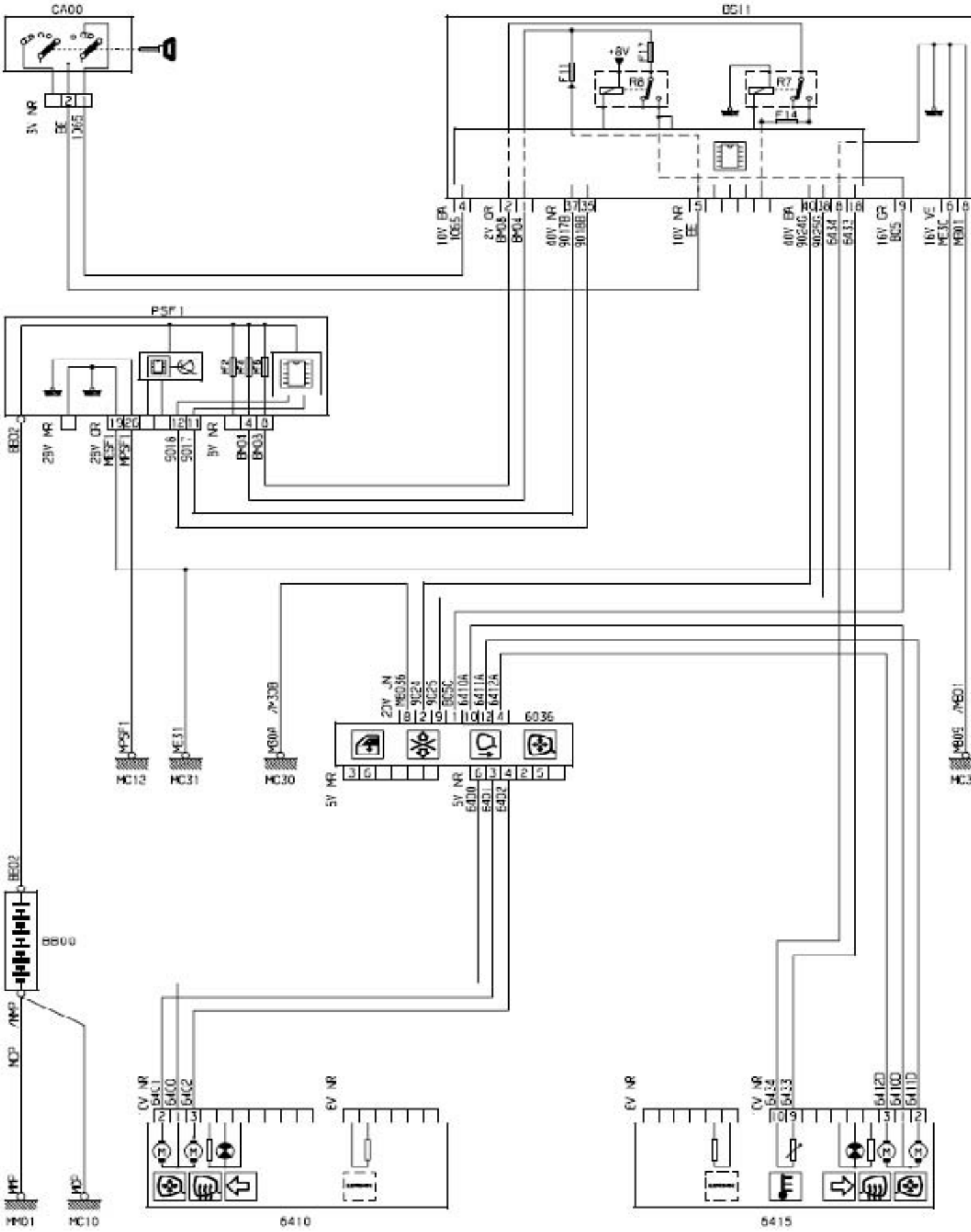
CA00
0511
PSF1
6036
6410
6415
MC12
MC31
MC30
MM01
MC10

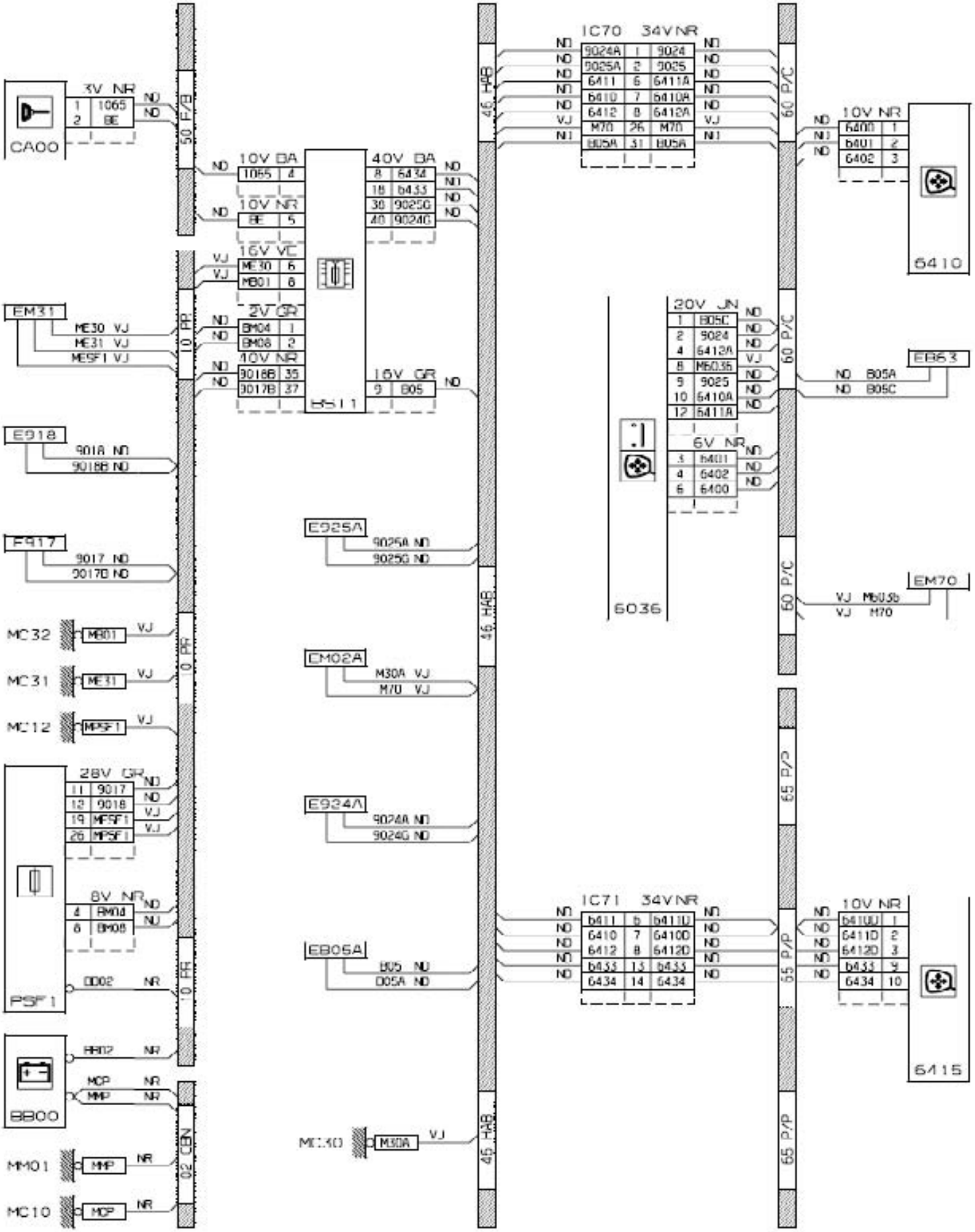
CA00
3V NR
1065
BE
50 F/B
10V DA
1065
10V NR
BE
16V VC
ME30
MB01
2V GR
BM04
BM08
40V NR
9018B
9017B
BS11
40V DA
6434
6433
9025G
9024G
16V GR
B05
46 HAB
IC70 34V NR
9024A
9025A
6411
6410
6412
M70
B05A
9024
9025
6411A
6410A
6412A
60 P/C
10V NR
6400
6401
6402
6410
EM31
ME30 VJ
ME31 VJ
MESF1 VJ
10 PR
E918
9018A NO
9018B NO
F917
9017 NO
9017B NO
E925A
9025A NO
9025G NO
20V JN
B05C
9024
6412A
M6035
9025
6410A
6411A
6V NR
6401
6402
6400
6036
EB63
B05A
B05C
EM70
M6035
M70
MC32
MB01
MC31
ME31
MC12
MPSF1
CM02A
M30A VJ
M70 VJ
28V GR
9017
9018
MPSF1
8V NR
BM04
BM08
PSF1
0002 NR
E924A
9024A NO
9024G NO
65 P/P
IC71 34V NR
6411
6410
6412
6433
6434
6411D
6412D
EB05A
B05 NO
B05A NO
10V NR
6411D
6412D
6433
6434
6415
BB00
BB02 NR
MCP NR
MMP NR
02 CBN
MM01
MMP NR
MC10
MCP NR
MC40
M30A VJ

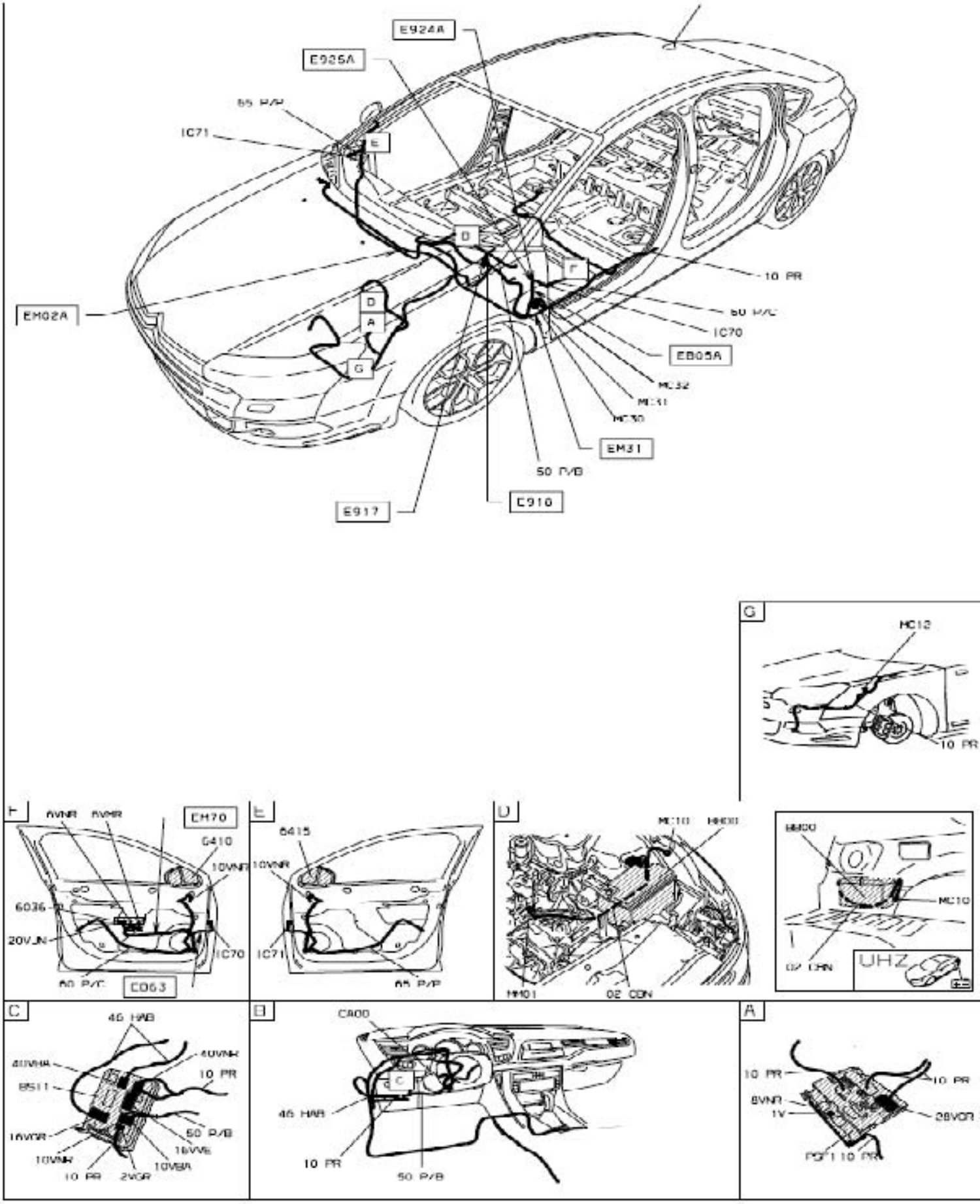
E924A
E925A
55 P/P
IC71
E
D
F
10 PR
EM02A
D
A
G
50 P/C
IC70
EB05A
MC32
MC31
MC30
EM31
50 P/B
E917
E910
G
MC12
10 PR
F
AVNR
AVNR
EM70
G410
10VNR
6036
20VJN
IC70
60 P/C
CD63
E
6415
10VNR
IC71
55 P/P
D
MC10
MM01
02 CDN
MM00
MC10
02 CHN
UHZ
C
46 HAB
40VNR
40VNR
10 PR
8511
16VGR
50 P/B
16VNR
10VNR
10VBR
10 PR
2VGR
B
CA00
C
46 HAB
10 PR
50 P/B
A
10 PR
10 PR
8VNR
1V
28VGR
PGF1 10 PR

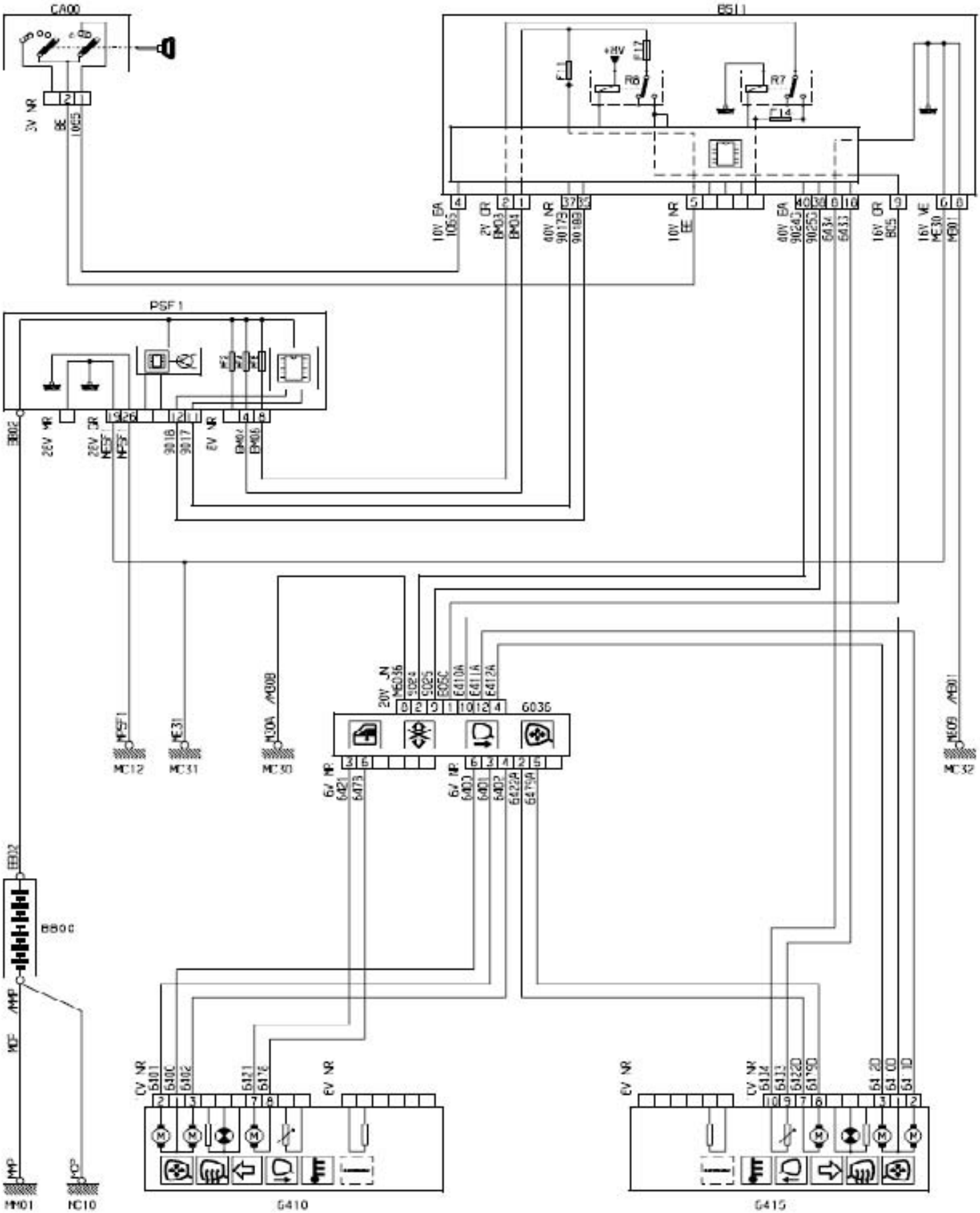
CA00
BS11
PSF1
G036
G410
G415
MC12
MC31
MC30
MC32
MM01
MC10