2.38 点烟器、点烟器照明、附件插头线路图

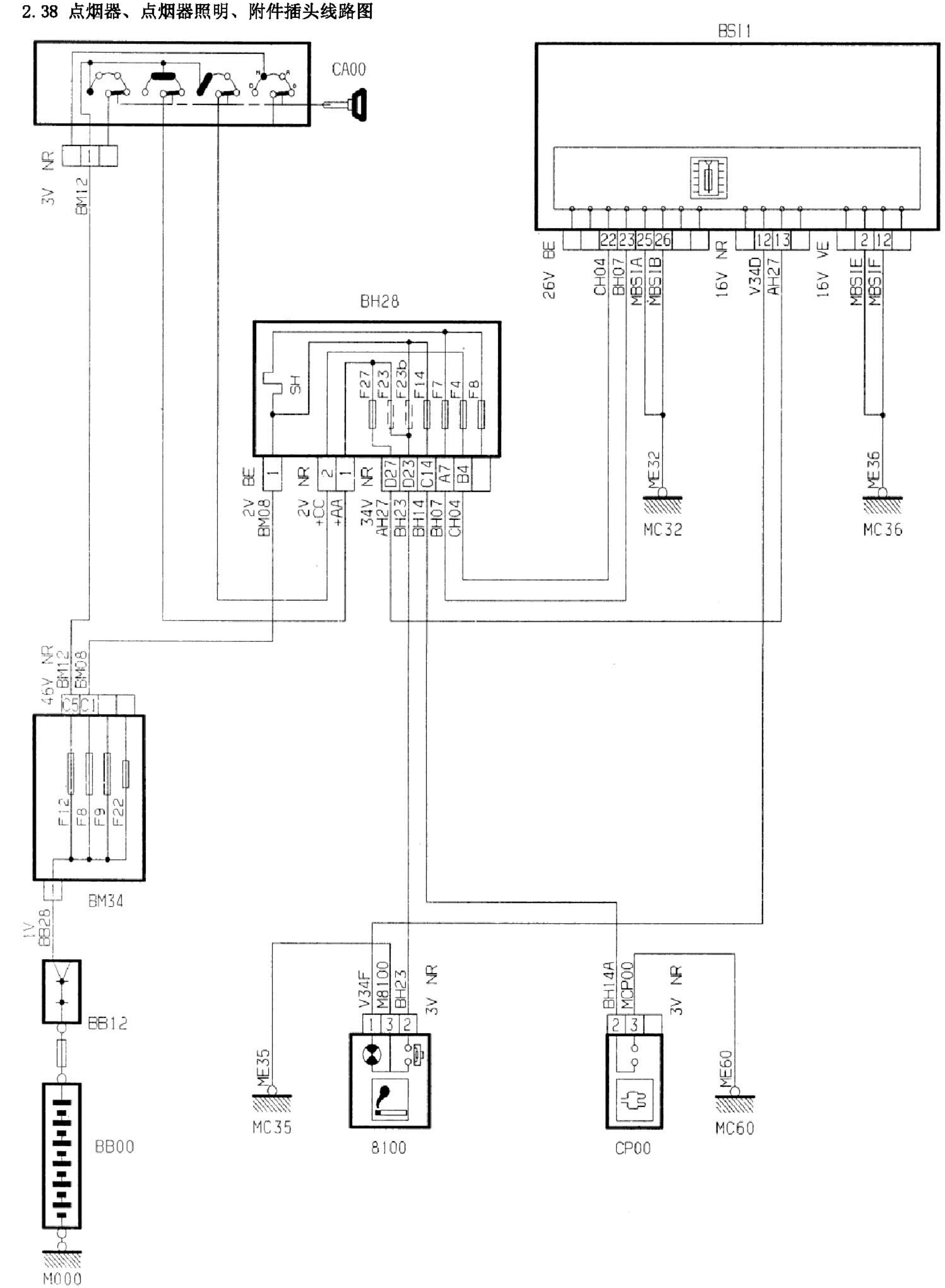

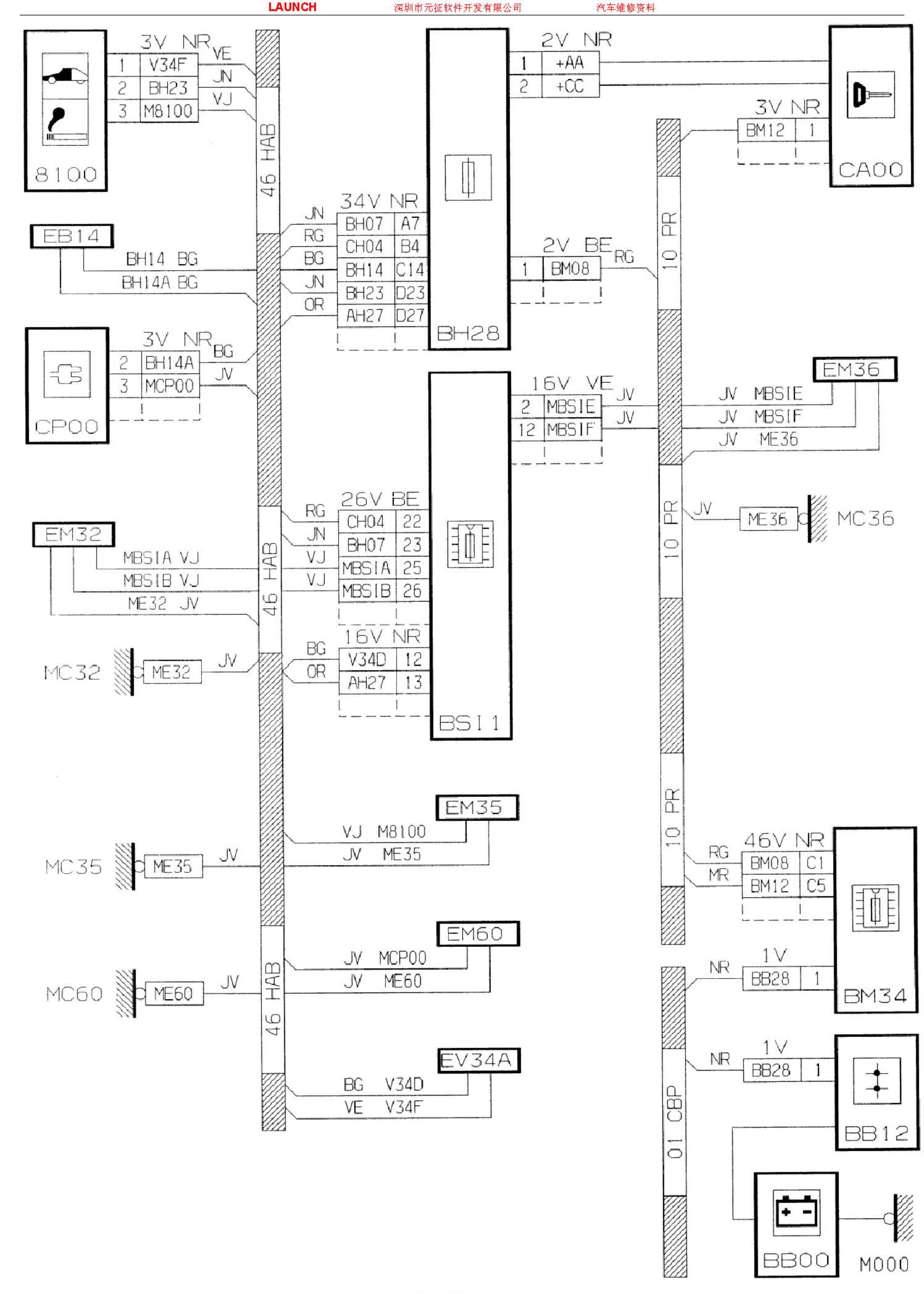
8100
3V NR
1 V34F VE
2 BH23 JN
3 M8100 VJ
46 HAB
BH28
2V NR
1 +AA
2 +CC
CA00
3V NR
BM12 1
10 PR
EB14
BH14 BG
BH14A BG
34V NR
JN BH07 A7
RG CH04 B4
BG BH14 C14
JN BH23 D23
OR AH27 D27
2V BE
1 BM08 RG
CP00
3V NR
2 BH14A BG
3 MCP00 JV
EM36
16V VE
2 MBSIE JV
12 MBSIF JV
JV MBSIE
JV MBSIF
JV ME36
EM32
MBSIA VJ
MBSIB VJ
ME32 JV
26V BE
RG CH04 22
JN BH07 23
VJ MBSIA 25
VJ MBSIB 26
16V NR
BG V34D 12
OR AH27 13
BSI 1
MC32
ME32
JV
JV
ME36
MC36
EM35
VJ M8100
JV ME35
MC35
ME35
JV
46V NR
RG BM08 C1
MR BM12 C5
EM60
JV MCP00
JV ME60
MC60
ME60
JV
1V
NR BB28 1
BM34
EV34A
BG V34D
VE V34F
01 CBP
BB12
BB00
M000

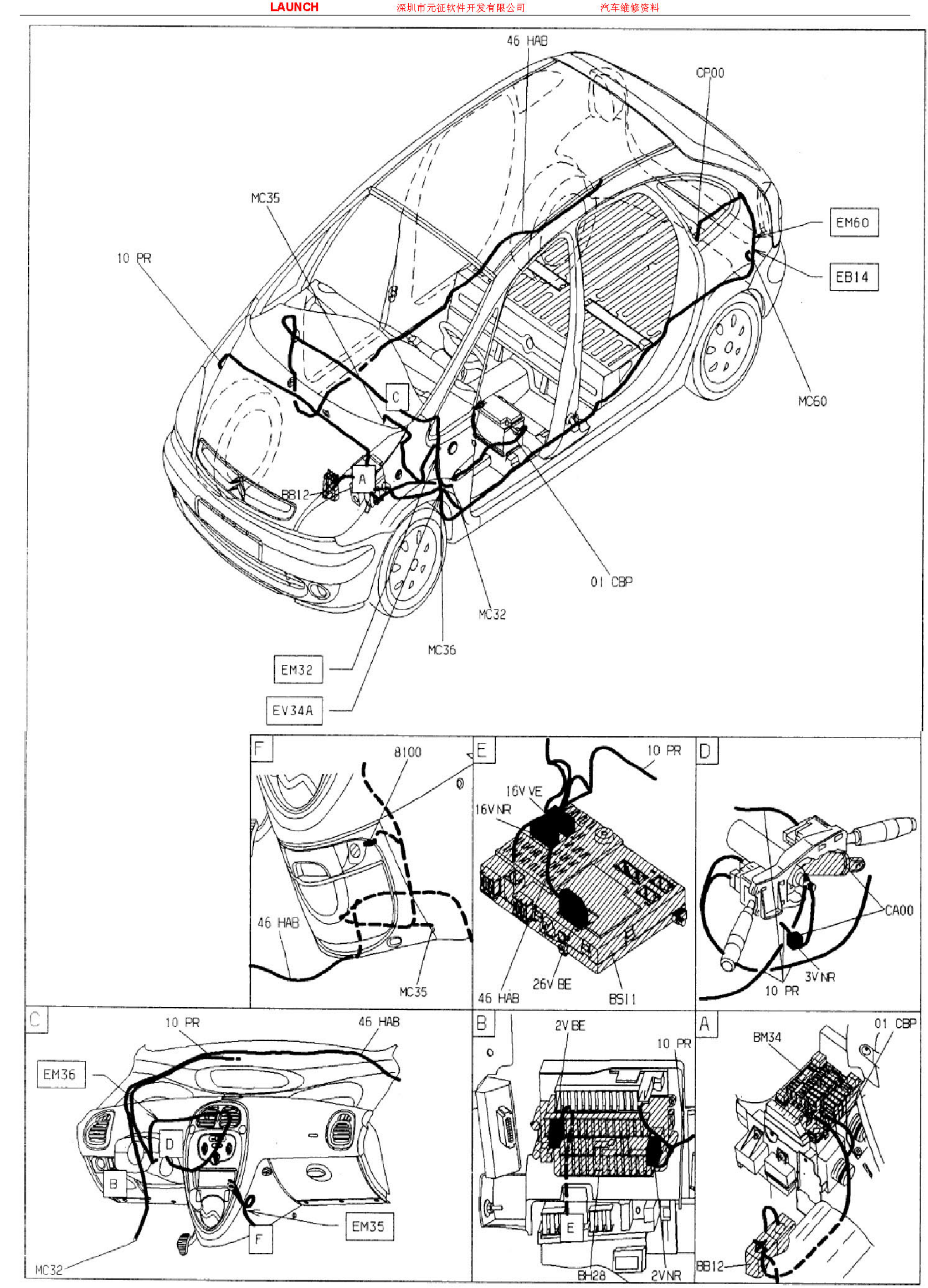
46 HAB
CP00
MC35
EM60
10 PR
EB14
C
MC60
A
BB12
01 CBP
MC32
MC36
EM32
EV34A
F
8100
E
10 PR
16V VE
16V NR
D
46 HAB
CA00
MC35
26V BE
3V NR
46 HAB
BS11
10 PR
C
10 PR
46 HAB
B
2V BE
A
01 CBP
EM36
10 PR
BM34
D
B
EM35
E
F
MC32
BH28
2V NR
BB12