2.42 点烟器线路图

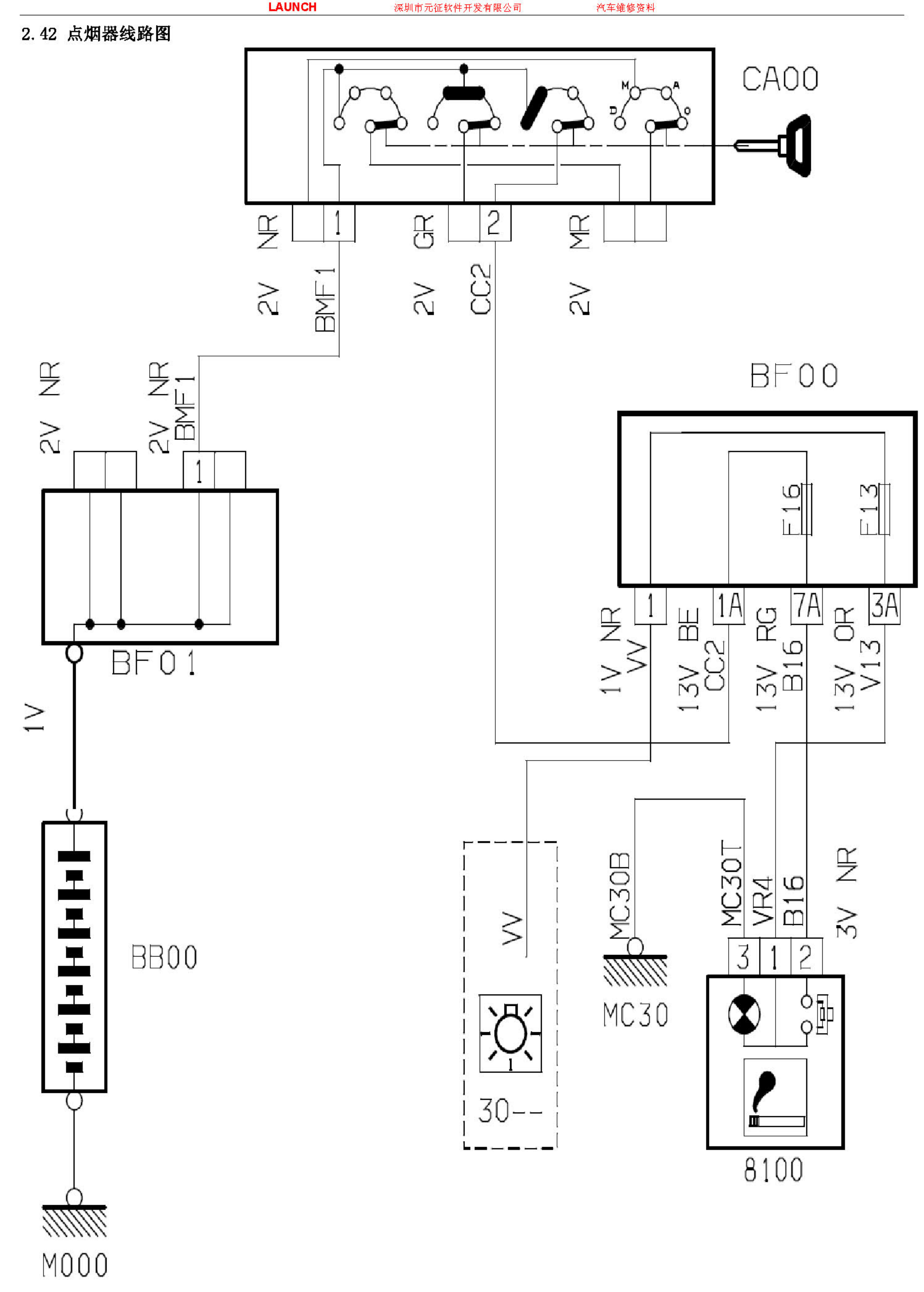
CA00
M
A
D
O
NR
1
GR
2
MR
2V
BMF1
2V
CC2
2V
NR
2V
NR
2V
BMF1
1
BF01
1V
BB00
M000
BF00
F16
F13
1
1A
7A
3A
1V NR
VV
13V BE
CC2
13V RG
B16
13V OR
V13
VV
30--
MC30B
MC30
MC30T
VR4
B16
3V NR
3
1
2
8100

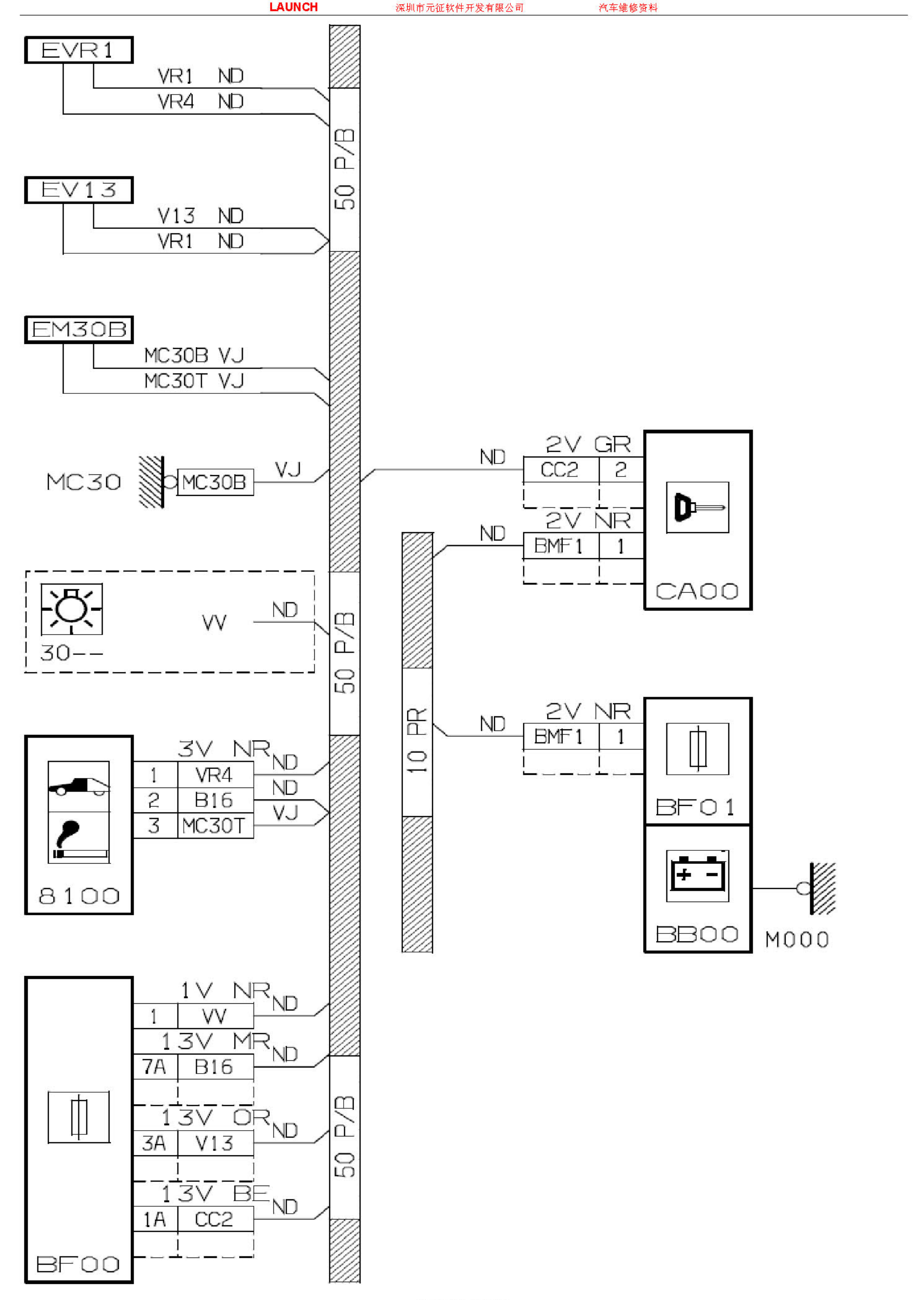
EVR1
VR1 ND
VR4 ND
EV13
V13 ND
VR1 ND
EM30B
MC30B VJ
MC30T VJ
MC30
MC30B
VJ
50 P/B
ND
2V GR
CC2
2
2V NR
BMF1
1
CA00
30--
W
ND
10 PR
ND
2V NR
BMF1
1
BF01
3V NR
1 VR4 ND
2 B16 ND
3 MC30T VJ
8100
BB00
M000
1V NR
1 W ND
13V MR
7A B16 ND
13V OR
3A V13 ND
13V BE
1A CC2 ND
BF00

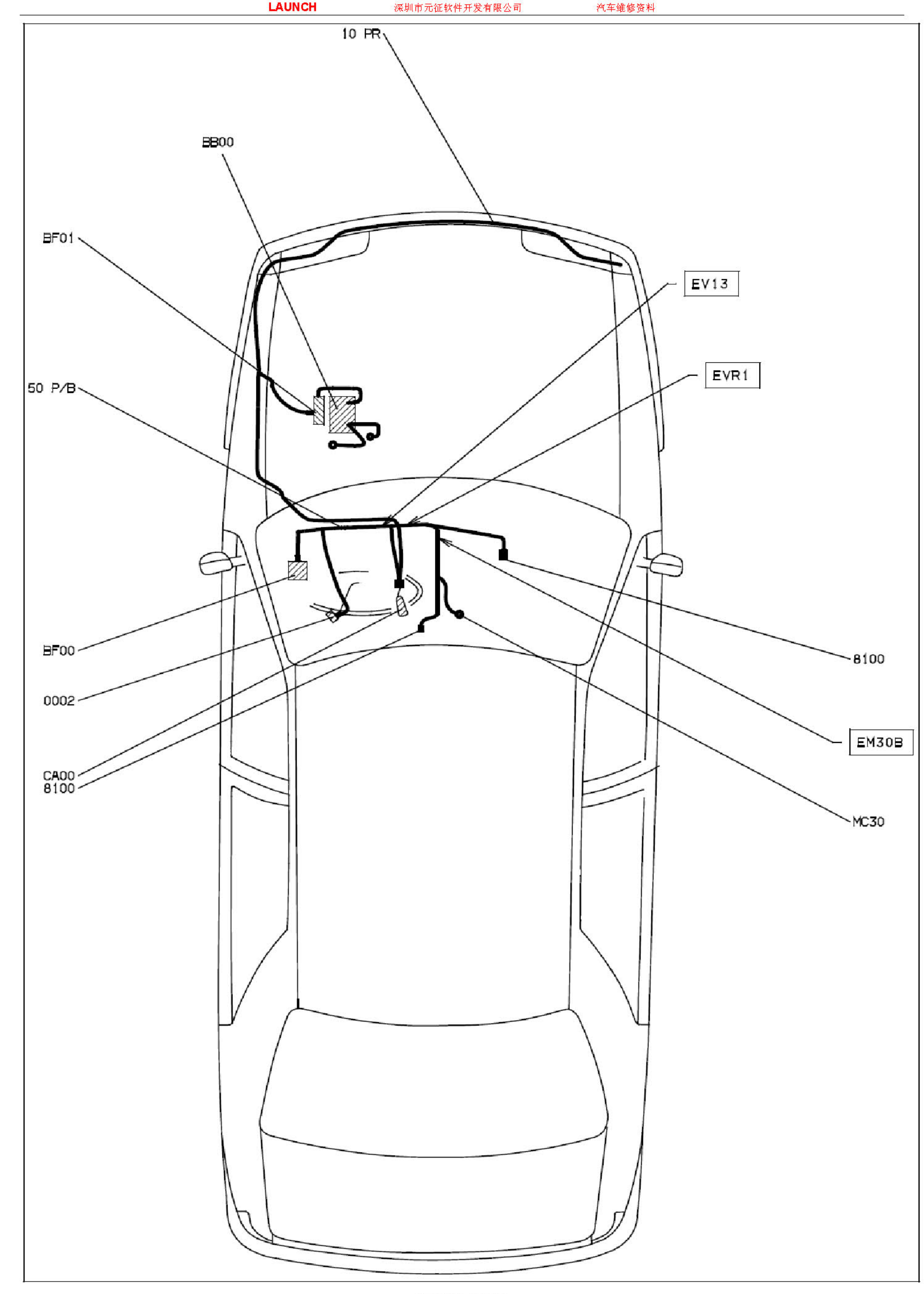
10 PR
BB00
BF01
EV13
EVR1
50 P/B
BF00
0002
CA00
8100
8100
EM30B
MC30