2.31 照明忘关蜂鸣器、钥匙未取下蜂鸣器、车门开启信息线路图

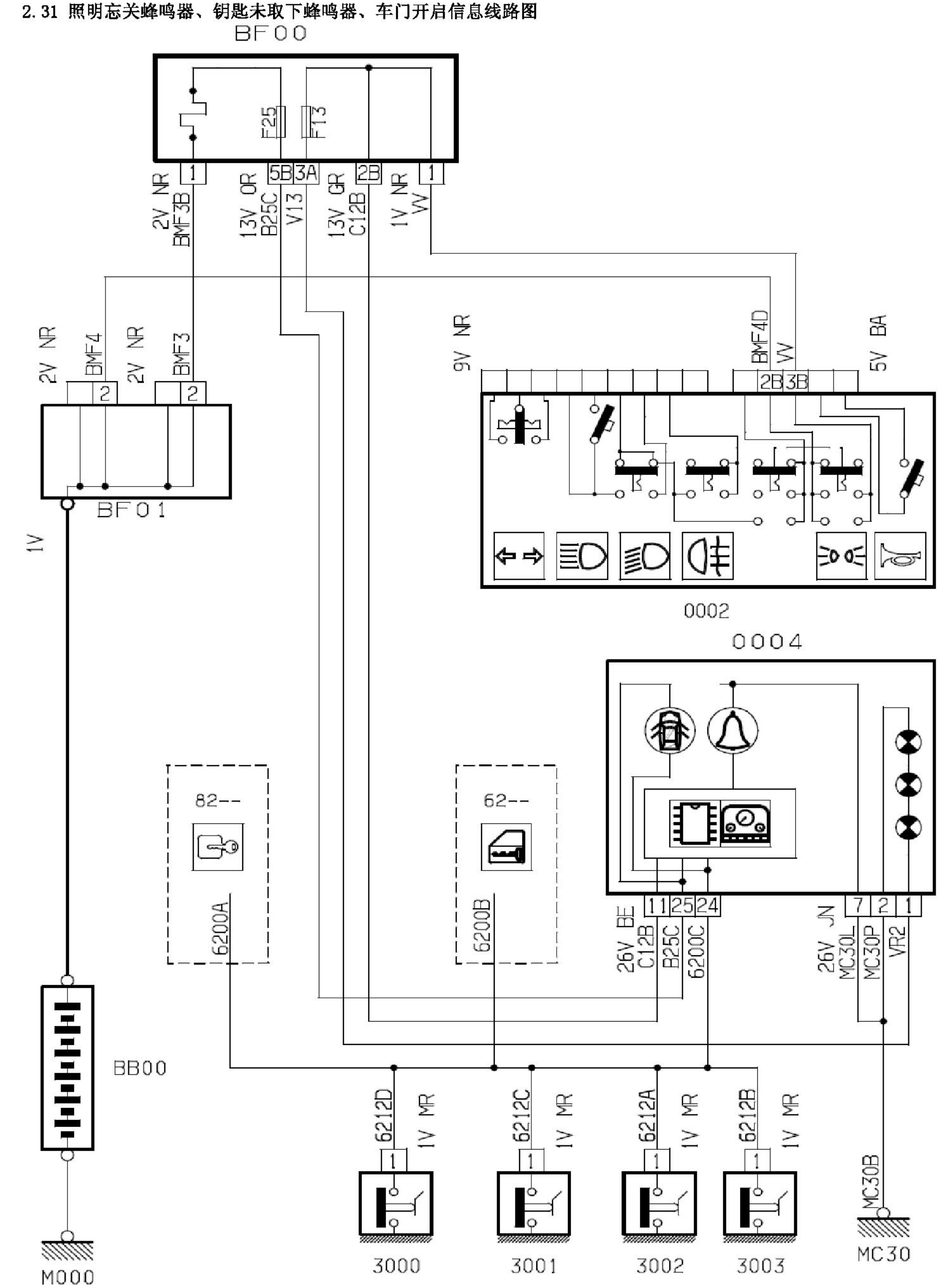

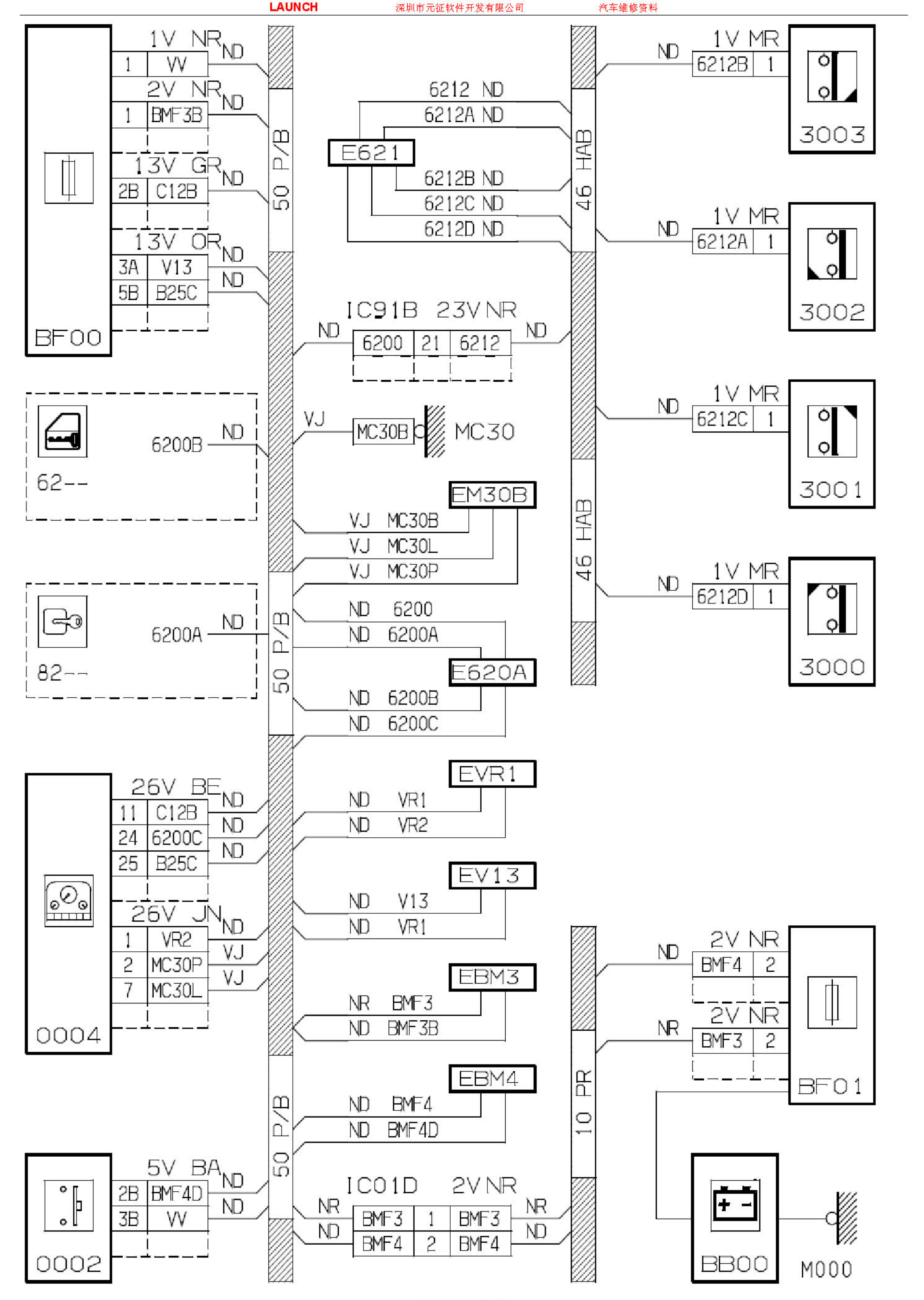
BF00
1V NR ND
1 W
2V NR ND
1 BMF3B
13V GR ND
2B C12B
13V OR ND
3A V13
ND
5B B25C
50 P/B
6212 ND
6212A ND
E621
6212B ND
6212C ND
6212D ND
46 HAB
1V MR
ND 6212B 1
3003
ND 6212A 1
3002
ND 6212C 1
3001
ND 6212D 1
3000
IC91B 23V NR
ND 6200 21 6212 ND
6200B ND
62--
VJ MC30B MC30
EM30B
VJ MC30B
VJ MC30L
VJ MC30P
ND 6200
ND 6200A
6200A ND
82--
E620A
ND 6200B
ND 6200C
EVR1
ND VR1
ND VR2
26V BE ND
11 C12B
24 6200C
25 B25C
EV13
ND V13
ND VR1
26V JN ND
1 VR2
2 MC30P
7 MC30L
VJ
VJ
0004
EBM3
NR BMF3
ND BMF3B
EBM4
ND BMF4
ND BMF4D
10 PR
2V NR
ND BMF4 2
2V NR
NR BMF3 2
BF01
5V BA ND
2B BMF4D
3B W
ND
0002
IC01D 2V NR
NR BMF3 1 BMF3 NR
ND BMF4 2 BMF4 ND
BB00
M000

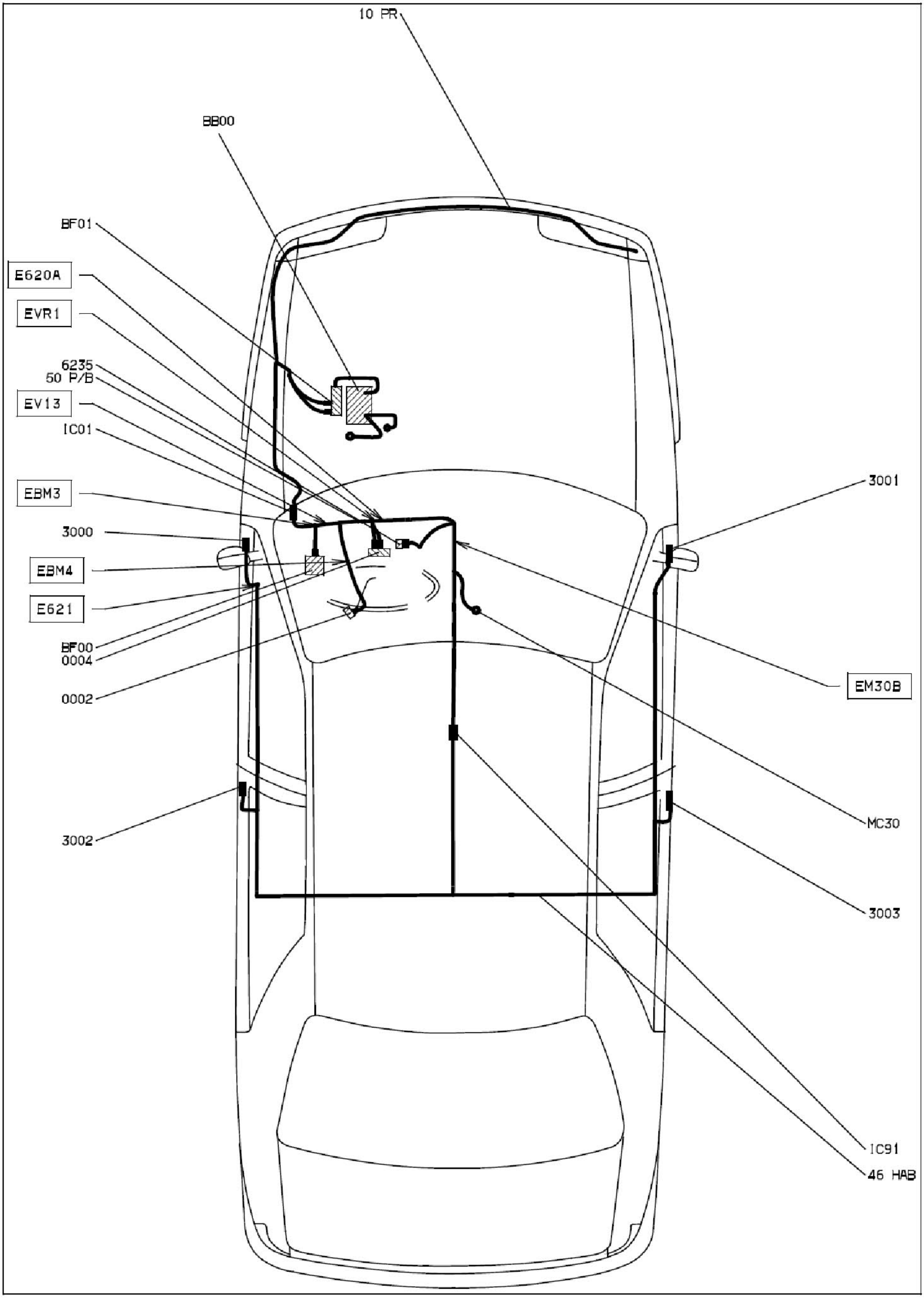
10 PR
BB00
BF01
E620A
EVR1
6235
50 P/B
EV13
IC01
EBM3
3000
EBM4
E621
BF00
0004
0002
3002
3001
EM30B
MC30
3003
IC91
46 HAB