2.43 密码应答器线路图（TU5JP4 N6A）

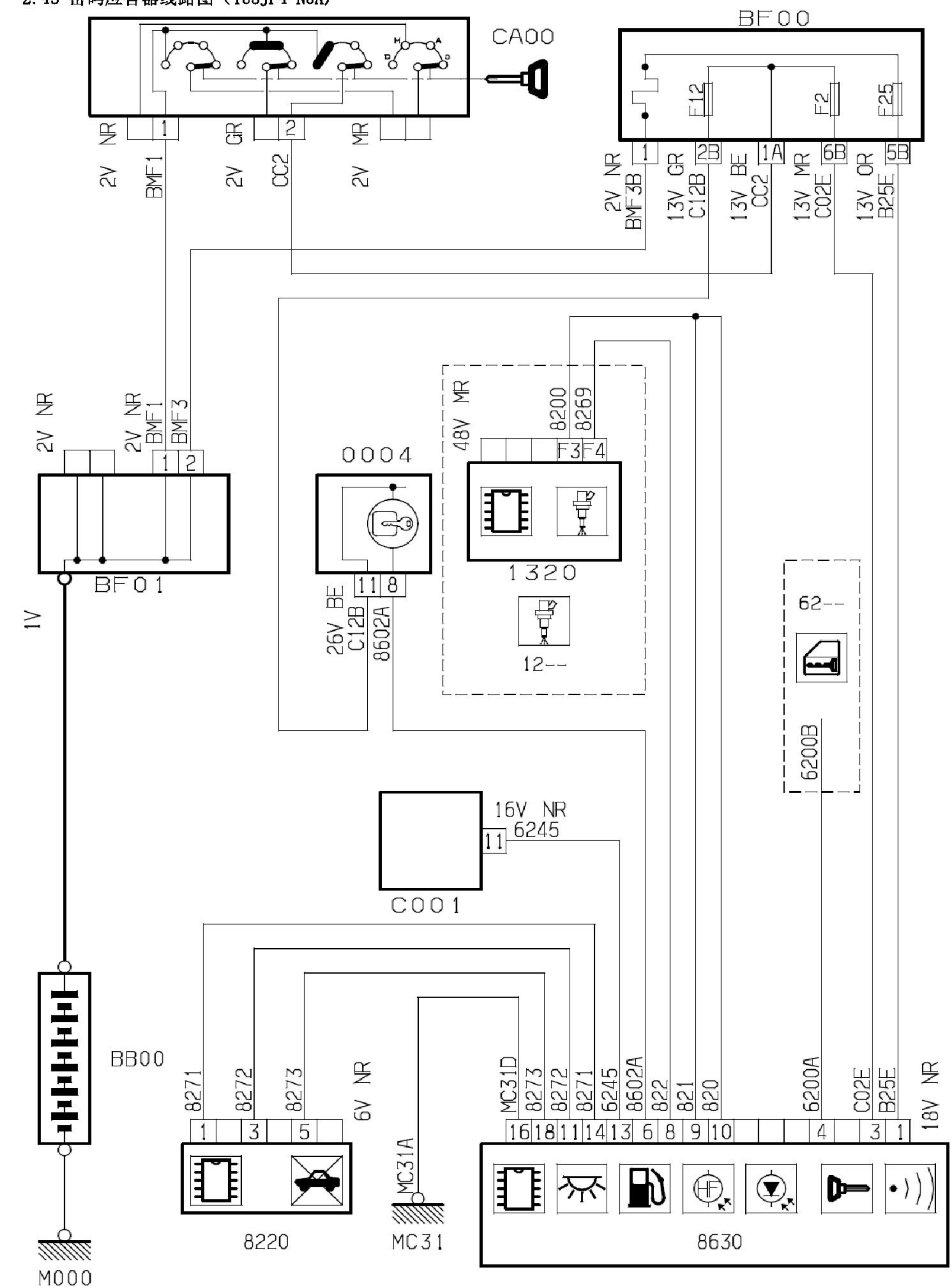

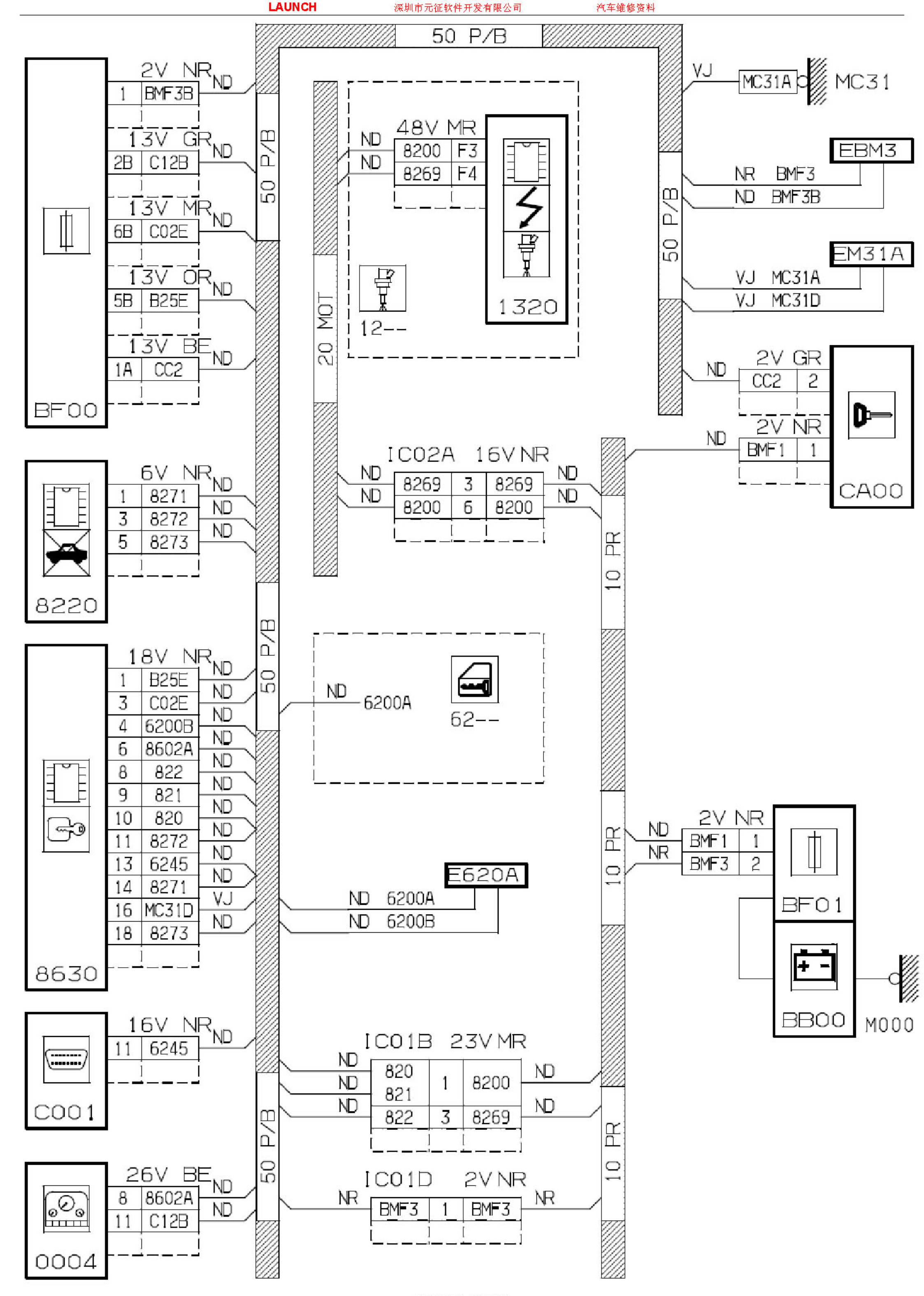
50 P/B
2V NR ND
1 BMF3B
13V GR ND
2B C12B
13V MR ND
6B C02E
13V OR ND
5B B25E
13V BE ND
1A CC2
BF00
6V NR
1 8271 ND
3 8272 ND
5 8273 ND
8220
18V NR
1 B25E ND
3 C02E ND
4 6200B ND
6 8602A ND
8 822 ND
9 821 ND
10 820 ND
11 8272 ND
13 6245 ND
14 8271 ND
16 MC31D VJ
18 8273 ND
8630
16V NR ND
11 6245
C001
26V BE
8 8602A ND
11 C12B ND
0004
20 MOT
48V MR
ND 8200 F3
ND 8269 F4
1320
12--
ICO2A 16V NR
ND 8269 3 8269 ND
ND 8200 6 8200 ND
ND 6200A
62--
E620A
ND 6200A
ND 6200B
ICO1B 23V MR
ND 820 821 1 8200 ND
ND 822 3 8269 ND
ICO1D 2V NR
NR BMF3 1 BMF3 NR
10 PR
VJ MC31A
MC31A MC31
EBM3
NR BMF3
ND BMF3B
EM31A
VJ MC31A
VJ MC31D
ND 2V GR
CC2 2
ND 2V NR
BMF1 1
CA00
ND 2V NR
BMF1 1
NR BMF3 2
BF01
BB00
M000

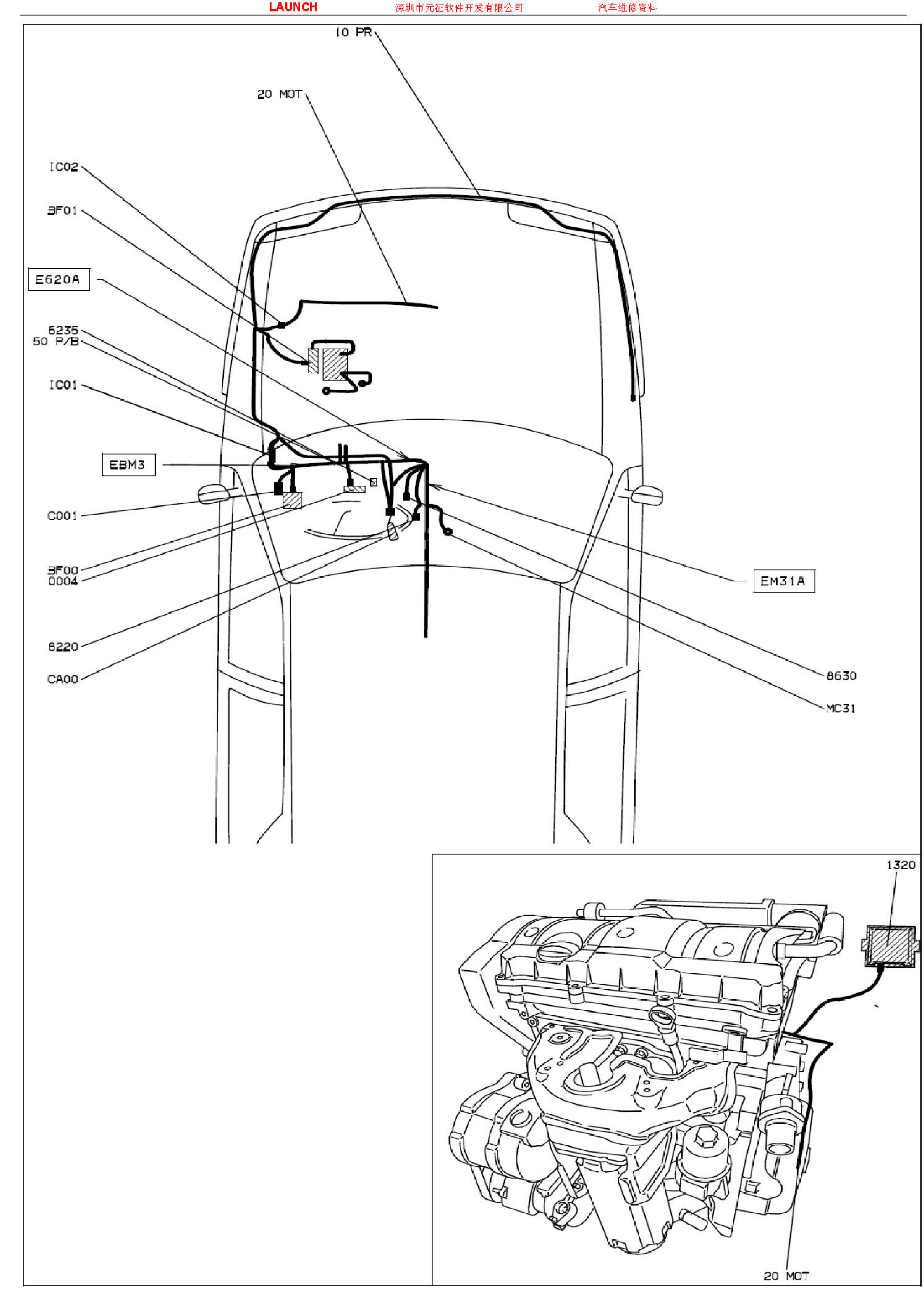
10 PR
20 MOT
IC02
BF01
E620A
6235
50 P/B
IC01
EBM3
C001
BF00
0004
8220
CA00
EM31A
8630
MC31
1320
20 MOT