2.9 起动机和发电机线路图（TU5JP4 N6A）

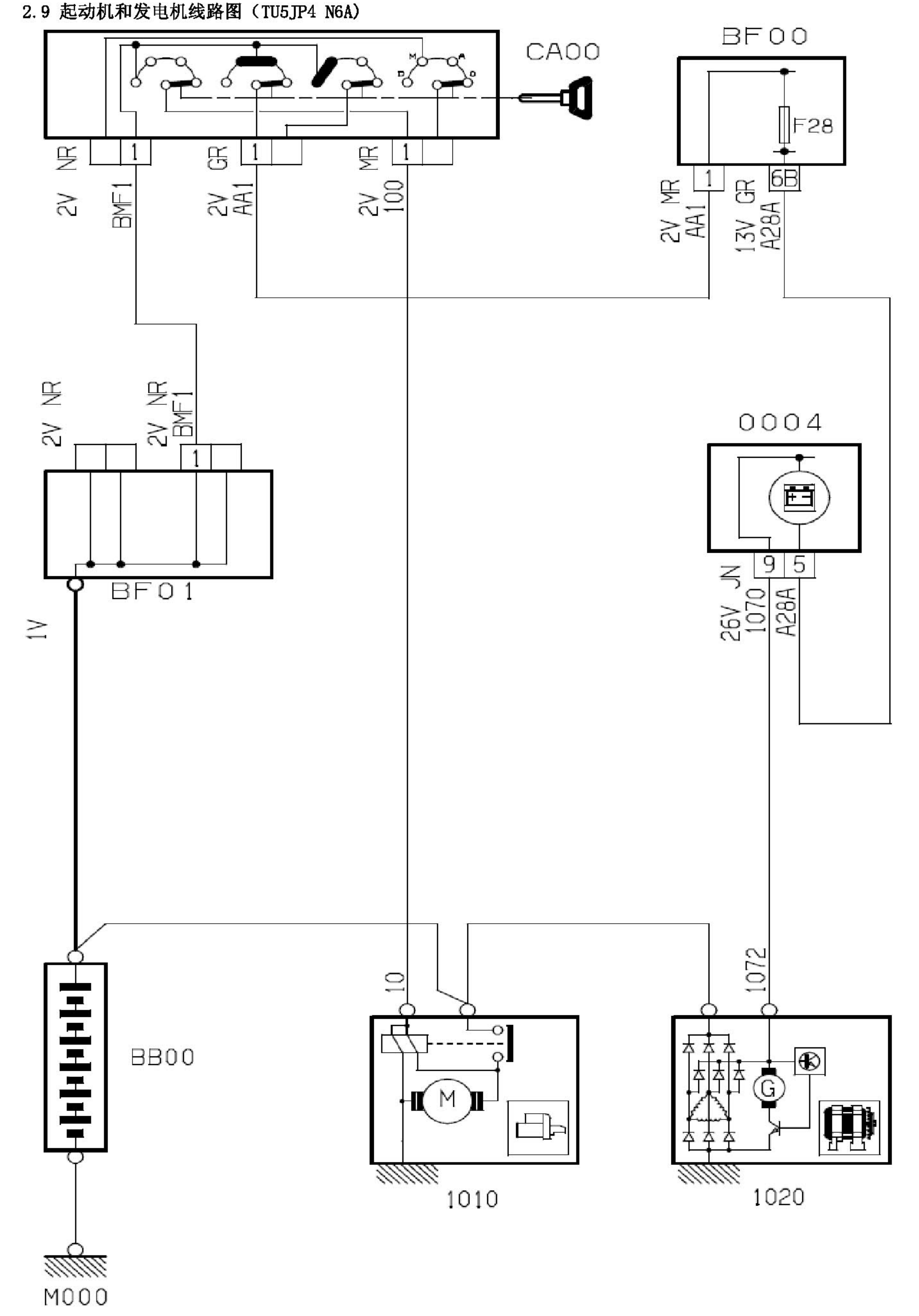

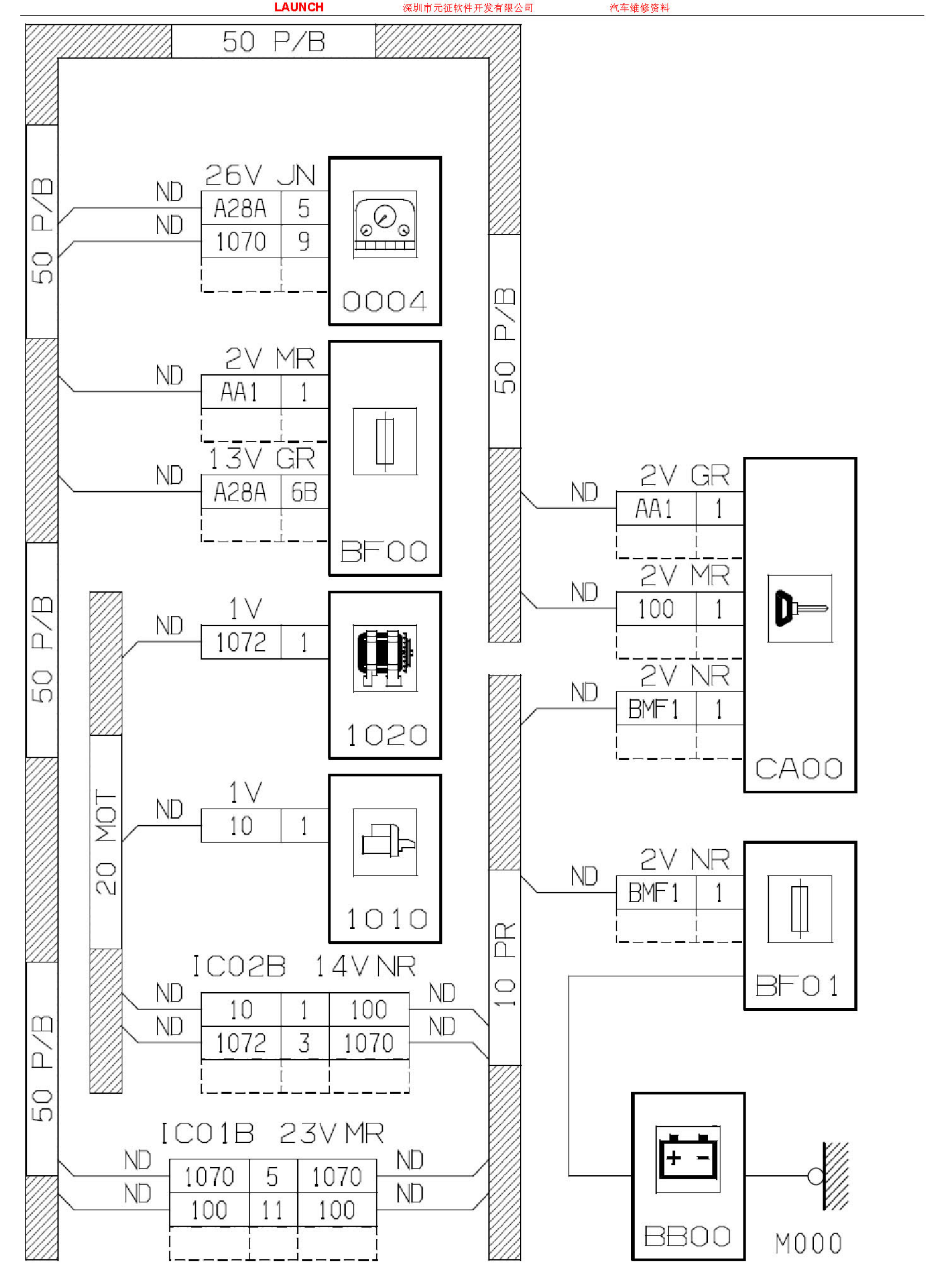
50 P/B
26V JN
ND
A28A 5
ND
1070 9
0004
2V MR
ND
AA1 1
13V GR
ND
A28A 6B
BF00
1V
ND
1072 1
1020
1V
ND
10 1
1010
20 MOT
IC02B 14V NR
ND
10 1 100
ND
1072 3 1070
IC01B 23V MR
ND
1070 5 1070
ND
100 11 100
10 PR
2V GR
ND
AA1 1
2V MR
ND
100 1
2V NR
ND
BMF1 1
CA00
2V NR
ND
BMF1 1
BF01
BB00
M000

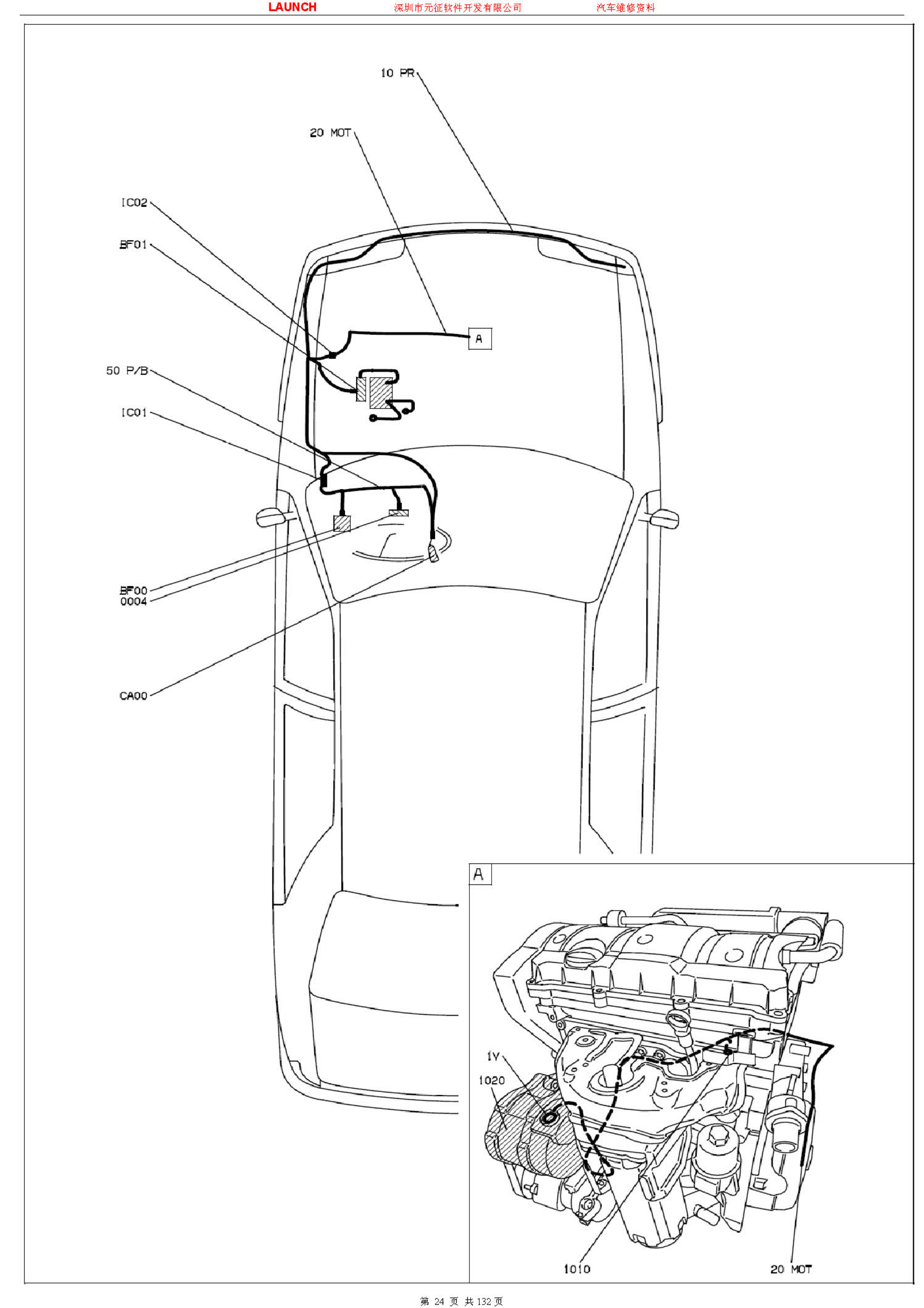
10 PR
20 MOT
IC02
BF01
A
50 P/B
IC01
BF00
0004
CA00
A
1V
1020
1010
20 MOT