2.46 制动灯线路图

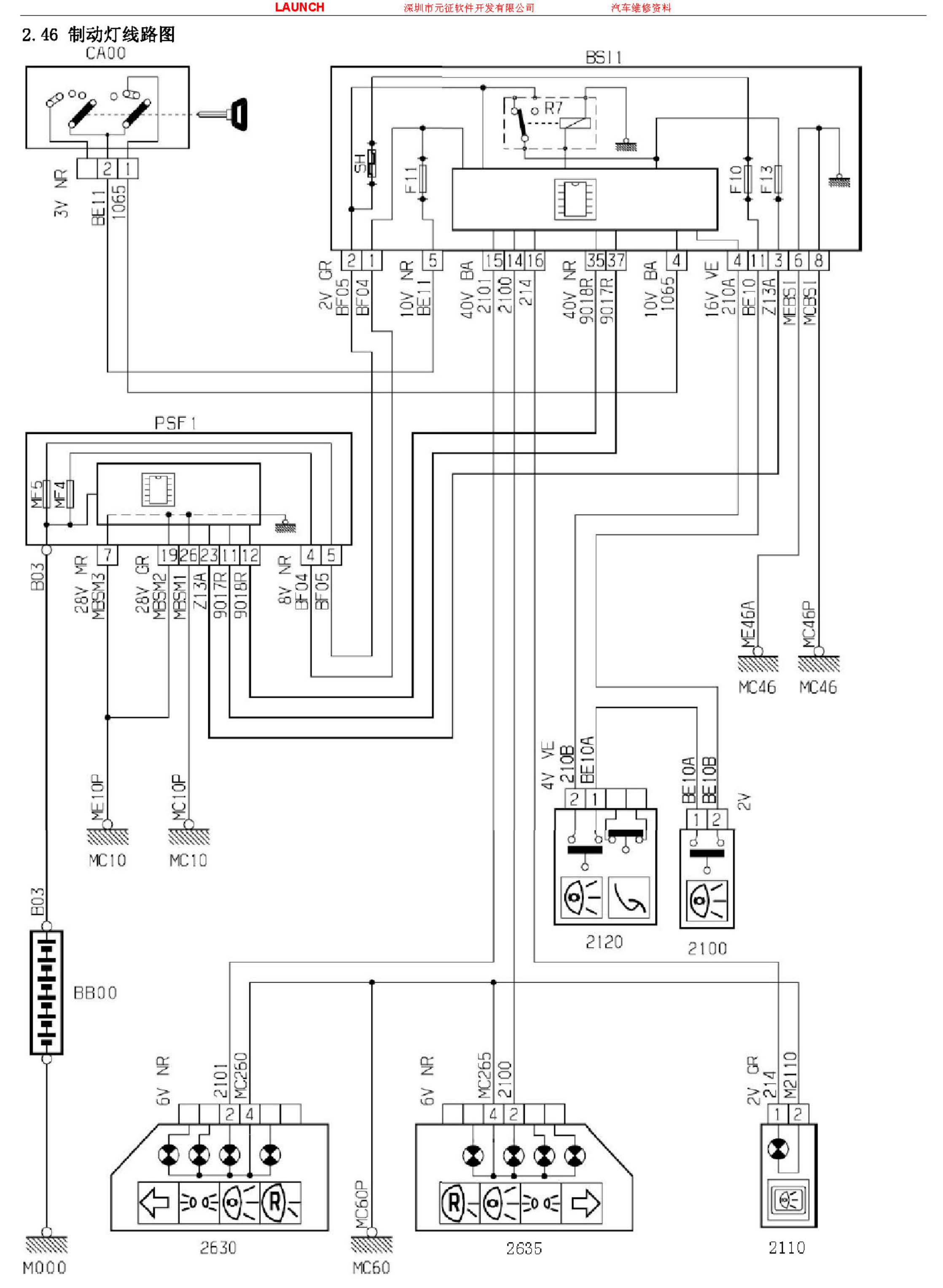
CA00
BSI1
R7
SH
F11
F10
F13
3V NR
BE11
1065
2V GR
BF05
BF04
10V NR
BE11
40V BA
2101
2100
214
40V NR
9018R
9017R
10V BA
1065
16V VE
210A
BE10
Z13A
MEBSI
MCBSI
PSF1
MF5
MF4
B03
28V MR
MBSM3
28V GR
MBSM2
MBSM1
Z13A
9017R
9018R
8V NR
BF04
BF05
ME46A
MC46P
MC46
MC46
ME10P
MC10P
MC10
MC10
4V VE
210B
BE10A
BE10A
BE10B
2V
2120
2100
B03
BB00
6V NR
2101
MC260
6V NR
MC265
2100
2V GR
214
M2110
MC60P
2630
2635
2110
M000
MC60

2.46.1 线路

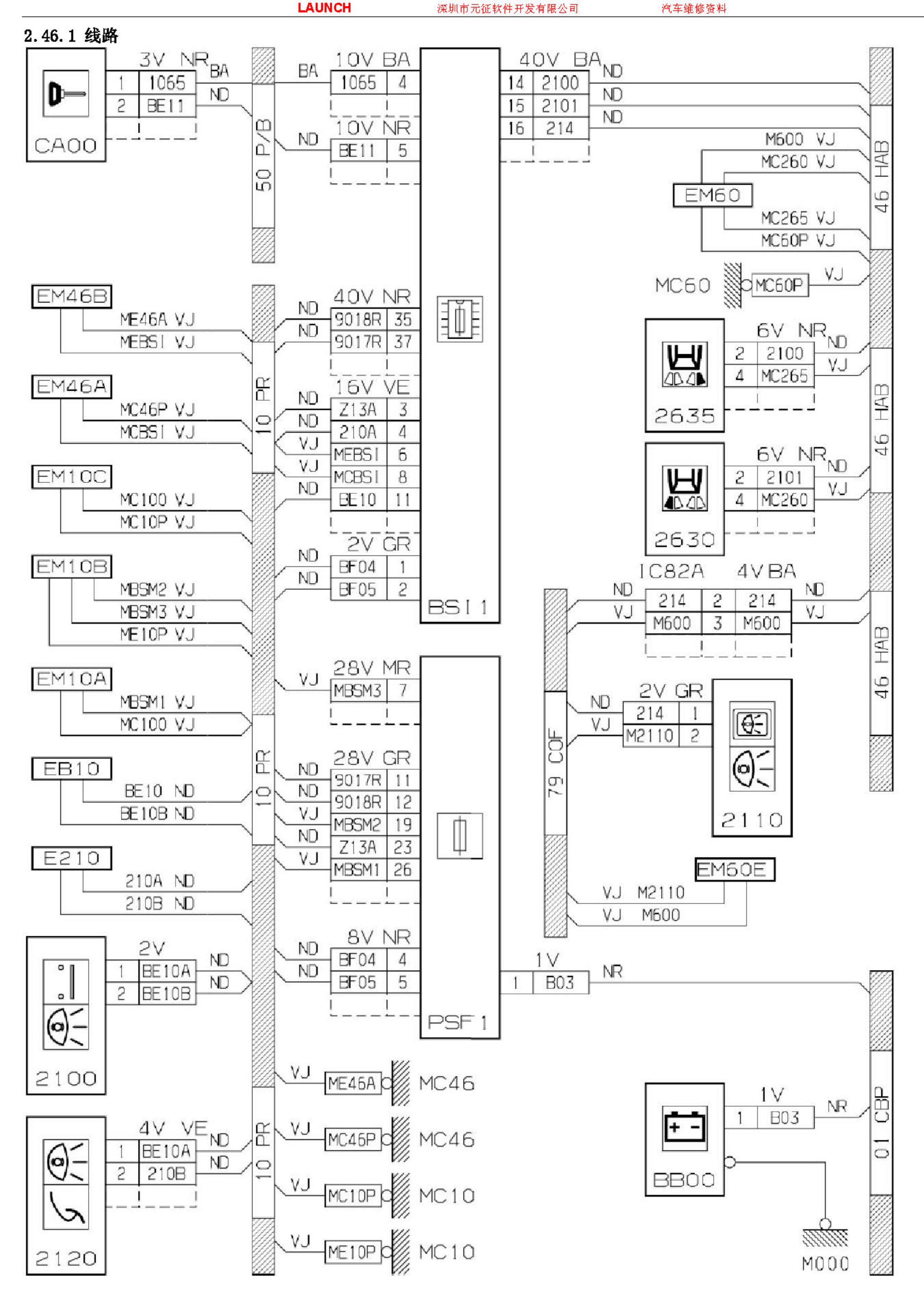
CA00
3V NR
1 1065 BA
2 BE11 ND
50 P/B
BA
ND
10V BA
1065 4
10V NR
BE11 5
40V BA
14 2100 ND
15 2101 ND
16 214 ND
46 HAB
M600 VJ
MC260 VJ
EM60
MC265 VJ
MC60P VJ
MC60
MC60P
VJ
EM46B
ME46A VJ
MEBSI VJ
EM46A
MC46P VJ
MCBSI VJ
EM10C
MC100 VJ
MC10P VJ
EM10B
MBSM2 VJ
MBSM3 VJ
ME10P VJ
EM10A
MBSM1 VJ
MC100 VJ
EB10
BE10 ND
BE10B ND
E210
210A ND
210B ND
10 PR
40V NR
9018R 35
9017R 37
16V VE
Z13A 3
210A 4
MEBSI 6
MCBSI 8
BE10 11
2V GR
BF04 1
BF05 2
BSI 1
28V MR
MBSM3 7
28V GR
9017R 11
9018R 12
MBSM2 19
Z13A 23
MBSM1 26
8V NR
BF04 4
BF05 5
PSF 1
6V NR
2 2100 ND
4 MC265 VJ
2635
6V NR
2 2101 ND
4 MC260 VJ
2630
IC82A 4V BA
214 2 214 ND
M600 3 M600 VJ
79 COF
2V GR
214 1 ND
M2110 2 VJ
2110
EM60E
VJ M2110
VJ M600
2V
1 BE10A ND
2 BE10B ND
2100
4V VE
1 BE10A ND
2 210B ND
2120
VJ ME46A MC46
VJ MC46P MC46
VJ MC10P MC10
VJ ME10P MC10
1V
1 B03 NR
BB00
M000
01 CBP

2.46.2 安装

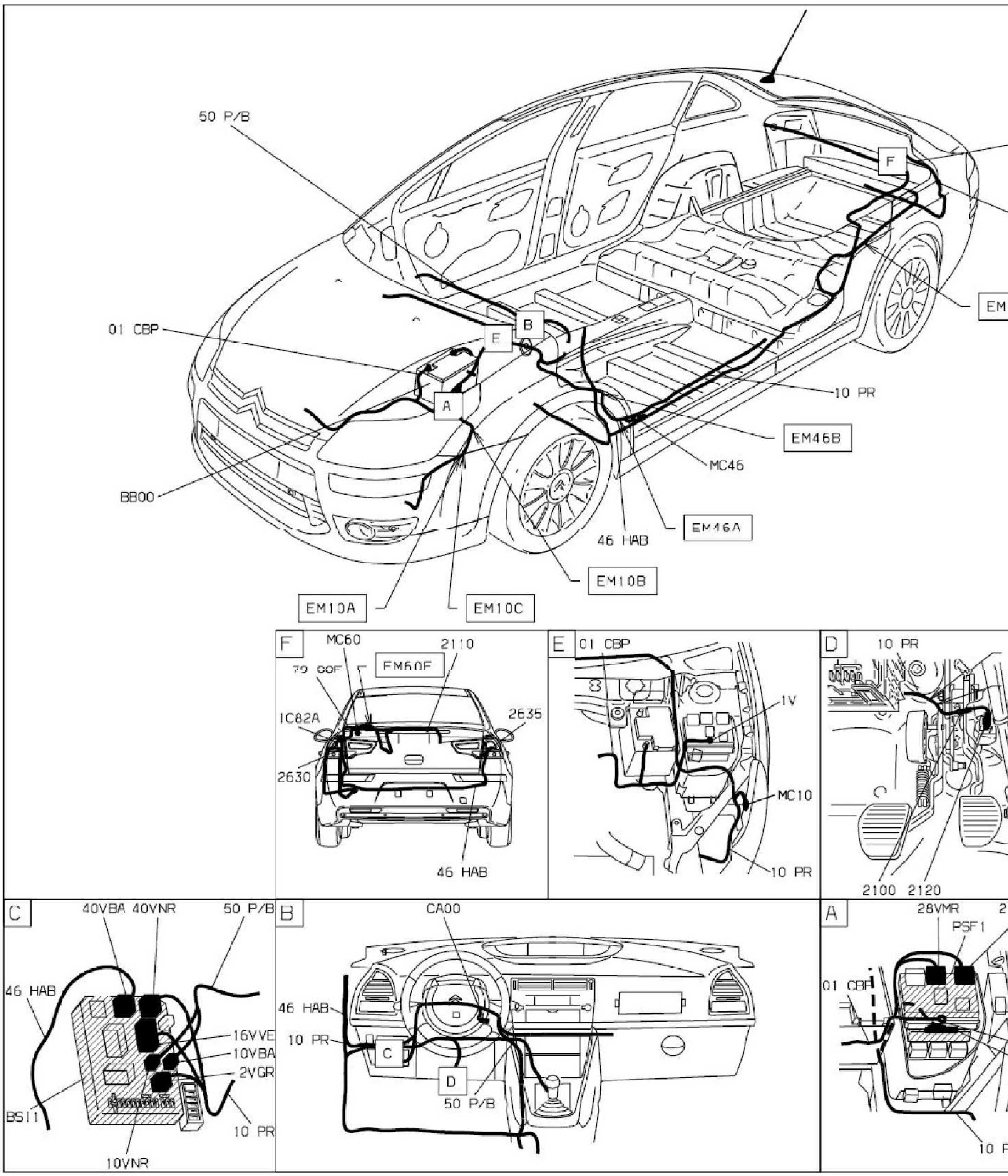
50 P/B
01 CBP
BB00
EM10A
EM10C
EM10B
46 HAB
EM46A
MC46
EM46B
10 PR
EM
F
E
B
A
MC60
2110
79 COF
EM60F
IC82A
2635
2630
46 HAB
01 CBP
1V
MC10
10 PR
10 PR
2100 2120
40VBA 40VNR
50 P/B
46 HAB
16VVE
10VBA
2VGR
BS11
10 PR
10VNR
CA00
46 HAB
10 PR
C
D
50 P/B
28VMR
PSF1
01 CBP
10 P